Published: 11-May-2011

Parking Brake and Actuation -

General Specification

Item	Specification
Make	Continental Teves
Model/type	N5528001
Operation	Twin cable operation to park brake with emergency cable release located in passenger compartment
Minimum brake lining material thickness	2.0 mm (0.078 in)

Torque Specifications

Description	Nm	lb-ft
Wedge adjuster Allen screw	7	5
Rear brake disc Torx screw	35	26
Brake caliper anchor plate to wheel knuckle bolts	115	85
Brake caliper to anchor plate bolts	35	26
Parking brake actuator and cable assembly nuts	5	4
Parking brake actuator mounting bracket bolts	22	16
Fuel tank heat shield nuts	3	2
Fuel tank heat shield bolts	6	4
* LH/RH parking brake cable bolts	22	16
Parking brake cable coupling	8	6
Road wheel nuts	140	103

*** New nuts/bolts must be installed**

mcx30.com

Published: 11-May-2011

Parking Brake and Actuation - Parking Brake

Description and Operation

COMPONENT LOCATIONS

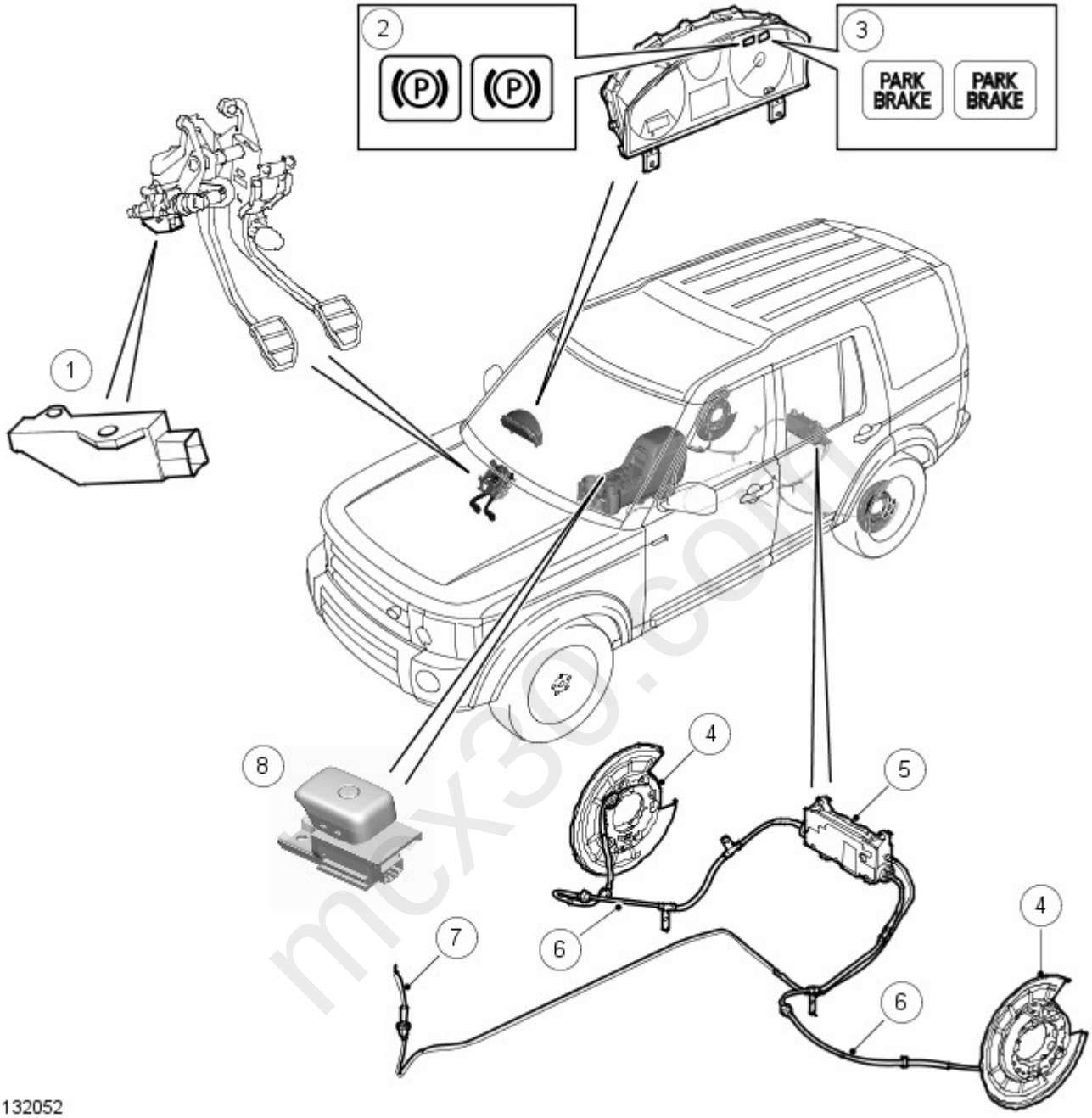

Item	Part Number	Description
1	-	Clutch pedal position sensor (manual transmission models only)
2	-	Parking brake indicators (all except NAS (north American specification))
3	-	Parking brake indicators (NAS only)
4	-	Drum brake
5	-	Parking brake module
6	-	Parking brake cable
7	-	Emergency release cable
8	-	Parking brake switch

GENERAL

The parking brake is an electrically actuated system that operates drum brakes integrated into the rear brake discs. The parking brake system consists of:

- A parking brake switch.
- Left and right drum brakes.
- Left and right brake cables.
- An emergency release cable.
- A clutch pedal position sensor (manual transmission models only).

- Two parking brake indicators.
- A parking brake module.

The parking brake is operated by the parking brake module, which adjusts the tension of the brake cables to apply and release the drum brakes. Operation of the parking brake module is initiated by the parking brake switch.

PARKING BRAKE SWITCH

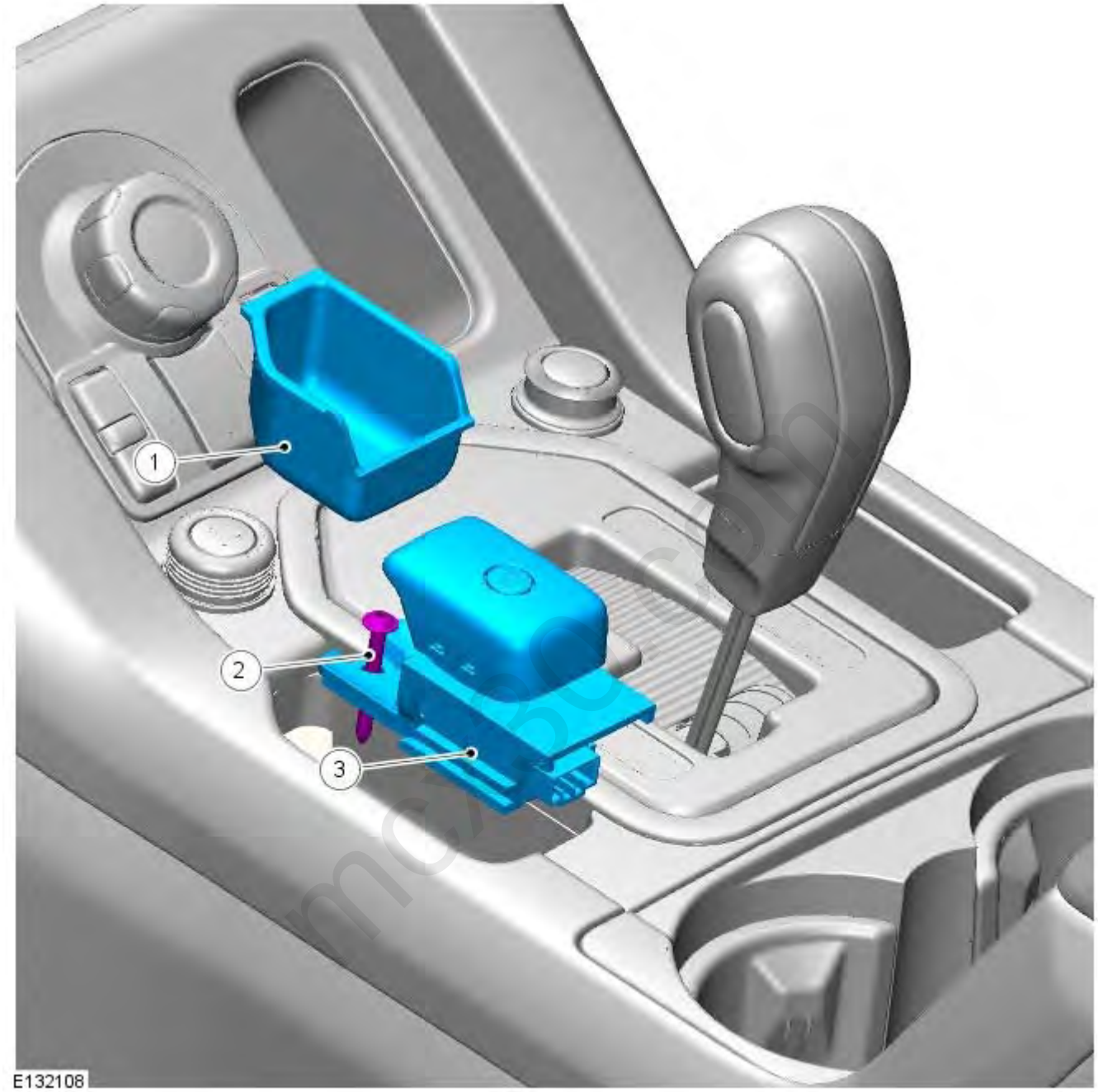

Item	Part Number	Description
1	-	Side stowage tray
2	-	Securing screw
3	-	Parking brake switch

The parking brake switch is used by the driver to apply and release the parking brake, and is installed in the center console adjacent to the gear lever.

Slots on the sides of the parking brake switch engage with the top panel of the center console, and a screw secures the parking brake switch in position. An electrical connector on the back of the switch provides the interface with the vehicle wiring. A brake symbol on the switch illuminates when the exterior lamps are selected on.

There are three states for the parking brake switch:

- Apply request, when the handle of the parking brake switch is pulled up.
- Release request, when the handle of the parking brake switch is pushed down.
- Idle, when the handle of the parking brake switch is in the central or rest position.

Microswitches, incorporated into the parking brake switch, are activated by the handle of the parking brake switch. To determine the operating state of the parking brake switch, the parking brake module scans the circuits containing the microswitches.

DRUM BRAKES

- NOTE: RH brake shown, LH brake similar

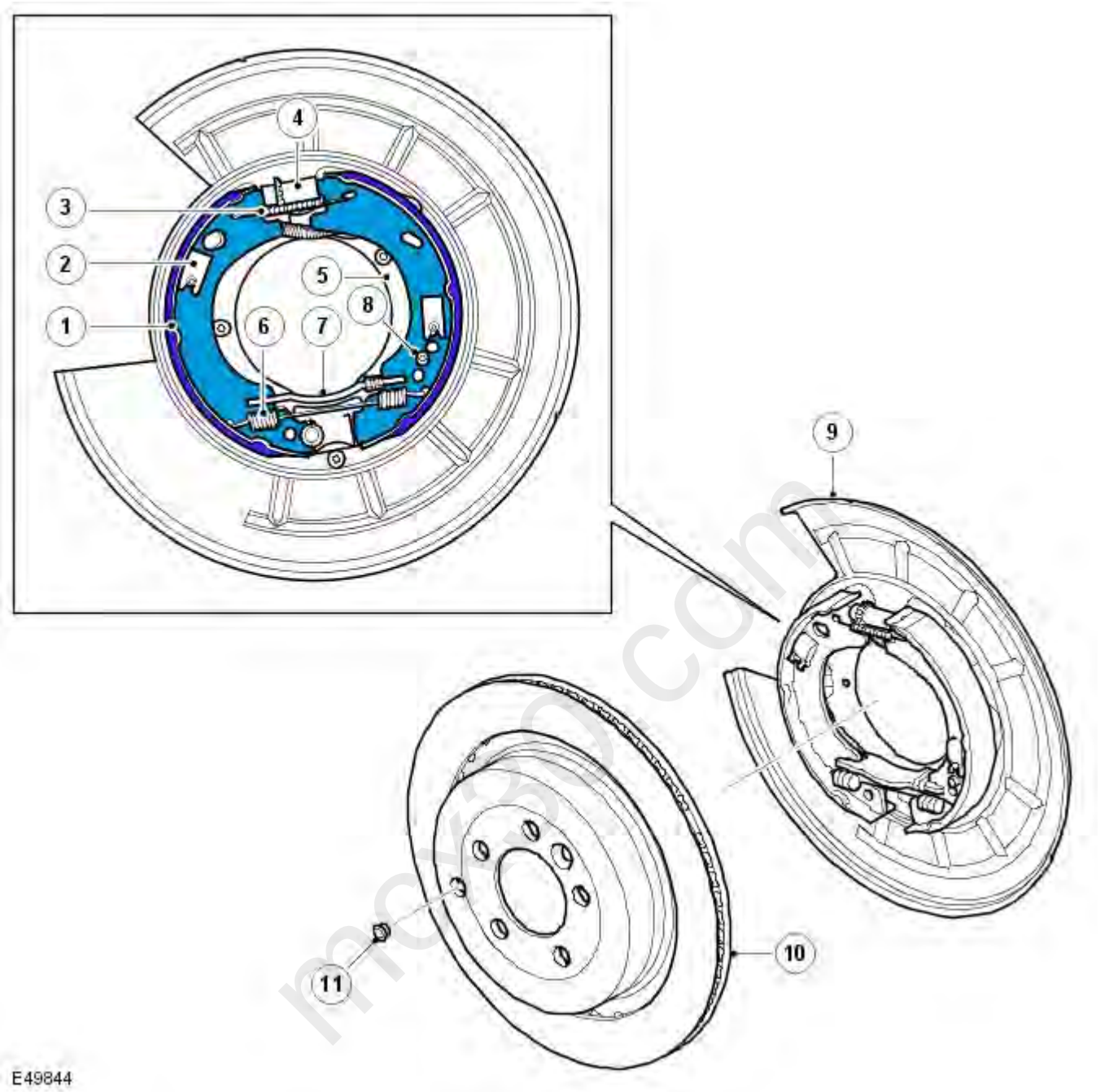

Item	Part Number	Description
1	-	Brake shoe
2	-	Shoe locating pin and clip
3	-	Adjuster spring
4	-	Toothed wheel adjuster
5	-	Backplate
6	-	Return spring
7	-	Cross strut
8	-	Wedge adjuster screw
9	-	Dust shield
10	-	Rear brake disc
11	-	Adjuster access plug

Each drum brake consists of a pair of brake shoes installed on a backplate attached to the rear hub carrier. The brake shoes operate on the drum integrated into the rear brake disc. The orientation of the brake shoes differ by 180° between the left-hand (LH) and right-hand (RH) brakes.

When the parking brake module tensions the brake cables, the movement is transmitted to an operating lever on one of the brake shoes. The operating lever pivots against a cross strut, which forces the brake shoes apart and into contact with the drum in the rear brake disc. Brake shoe to drum clearance is set with two manual adjusters, which are accessed through a hole in the brake disc. One of the adjusters is a conventional toothed wheel adjuster. The second adjuster is a wedge adjuster operated by an Allen screw.

After replacement of the brake shoes or brake discs, a bedding in procedure must be performed to ensure the drum brakes operate satisfactorily.
For additional information, refer to: Parking Brake Shoe and Lining Adjustment (206-05 Parking Brake and Actuation, General Procedures).

Prior to removing a brake disc from a vehicle, power should be disconnected from the parking brake module. Operation of the parking brake switch while a brake disc is removed can cause the actuating mechanism in the parking brake module to seize.

BRAKE CABLES

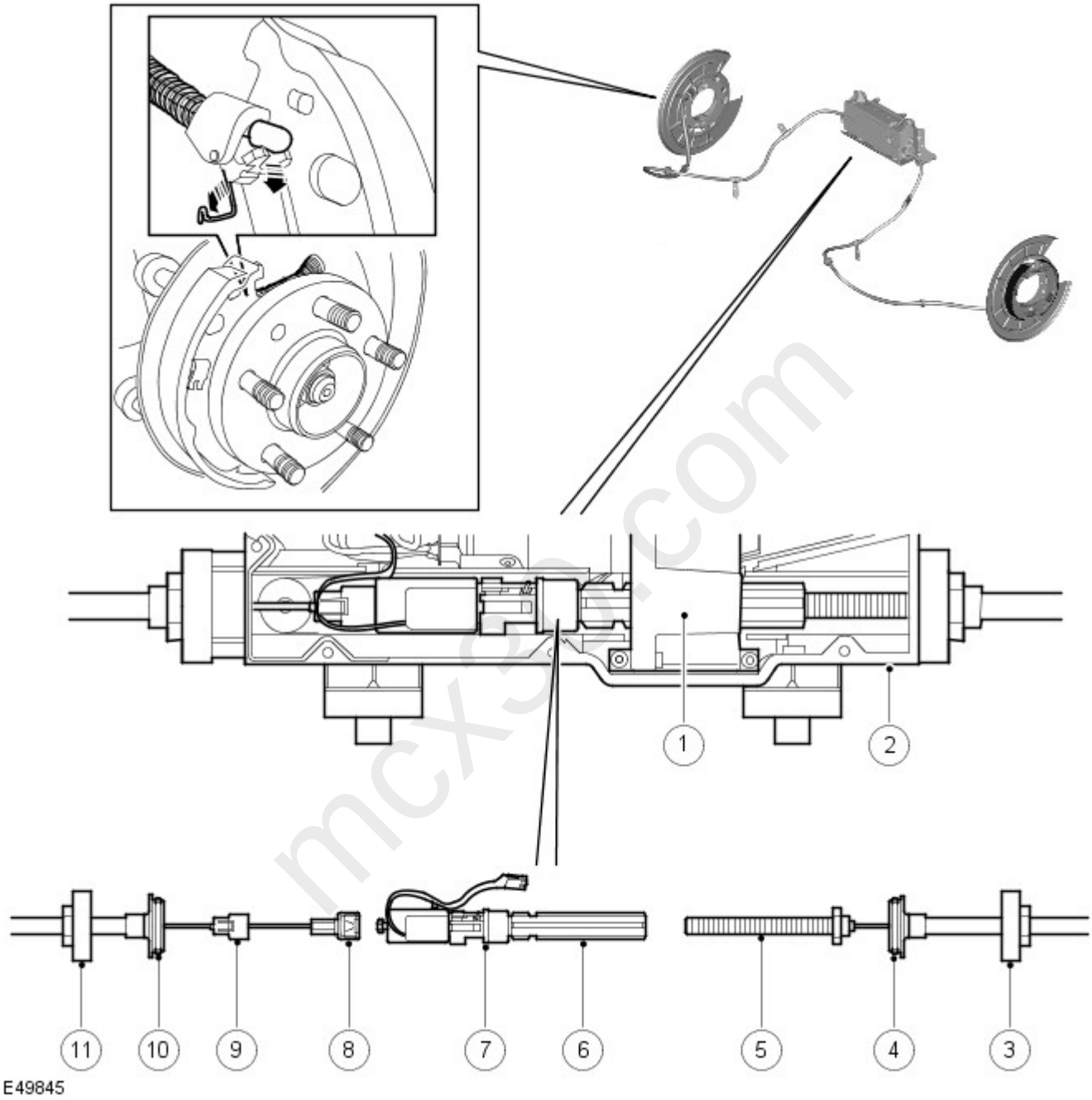

Item	Part Number	Description
1	-	Gearbox
2	-	Parking brake module housing
3	-	Cable nut
4	-	Sealing collar
5	-	Threaded connector
6	-	Spline shaft
7	-	Force sensor
8	-	Shoe
9	-	Locking cover
10	-	Sealing collar
11	-	Cable nut

The brake cables consist of Bowden cables installed between the parking brake module and the drum brakes. Nuts, on the ends of the outer cables, secure the brake cables to the parking brake module and the backplate of the related drum brake. In each drum brake, the inner cable is located in the guide spring and connected to the brake shoe operating lever

by a nipple on the end of the cable. In the parking brake module, the two inner cables are joined together via the force sensor and the spline shaft.

The inner cable of the RH brake cable is connected to a nipple on the force sensor by a 'shoe' on the end of the cable; a locking cover keeps the shoe engaged with the nipple.

The inner cable of the LH brake cable is connected to the spline shaft by a threaded connector (LH thread); a squared flange at the end of the threaded connector locates in the housing of the parking brake module, to prevent the threaded connector from turning with the spline shaft.

When the spline shaft turns, the threaded connector of the LH brake cable is screwed into or out of the spline shaft, which changes the effective length of the inner cables and operates the drum brakes. The ability of the spline shaft to move axially in the gearbox equalizes the load applied by the inner cables to the two drum brakes.

Prior to disconnecting a brake cable, power should be disconnected from the parking brake module. Operation of the parking brake switch while a brake cable is disconnected can cause the actuating mechanism in the parking brake module to seize. In addition, the parking brake may not switch off until 20 minutes after Power mode 0 selected. Automatic re-apply cannot be eliminated until this period has expired.

EMERGENCY RELEASE CABLE

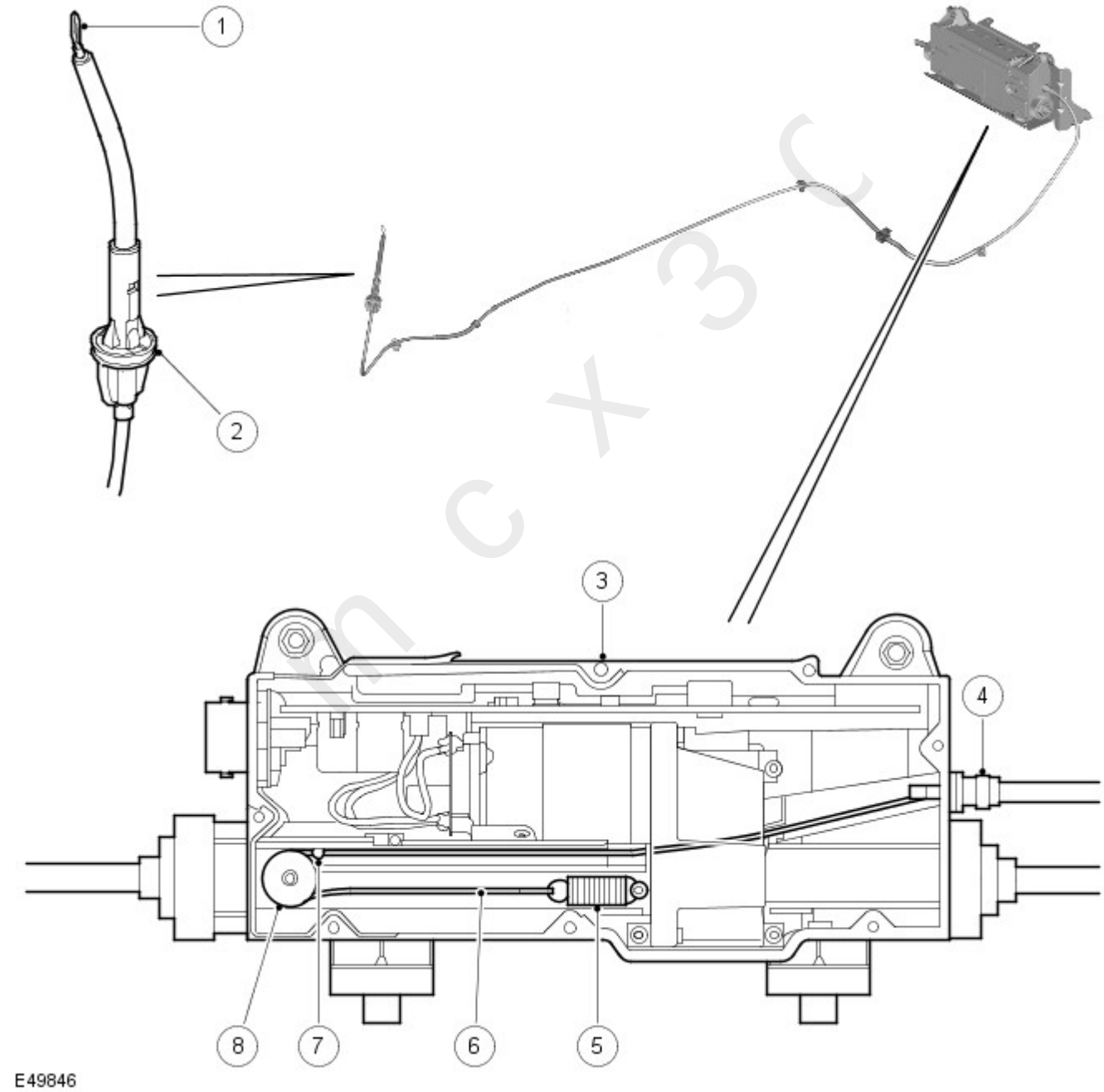

Item	Part Number	Description
1	-	Pull ring
2	-	Quick release fitting
3	-	Parking brake module
4	-	Sealing collar
5	-	Spring

6	-	Inner cable
7	-	Nipple
8	-	Pulley wheel

The emergency release cable allows the parking brake to be mechanically released if:

- The parking brake cannot be electrically released because of a system fault.
- The battery is disconnected or battery voltage decreases below 7.5 volts while the parking brake is applied, so that the parking brake cannot be electrically released.

The parking brake is mechanically released by disconnecting the force sensor from the spline shaft in the parking brake module. During normal operation, the force sensor and the spline shaft are locked together by a lever operated pawl on the end of the spline shaft, which engages with a spigot on the force sensor.

The emergency release cable is a Bowden cable installed between the parking brake module and the center console. The emergency release cable is held in clips along the underside of the vehicle and enters the passenger compartment below the center console through an aperture in the transmission tunnel. A quick release fitting seals the emergency release cable in the aperture. At the parking brake module, a sealing collar on the outer cable is a push fit in the housing of the parking brake module.

In the center console, a pull ring is installed on the end of the inner cable. The pull ring is designed to fit the hook on the end of the jack handle which, in combination with a screwdriver shaft, can be used to pull on the cable.

The pull required to release the latch is approximately 200 N (45 lbf). When the pull ring of the emergency release cable is released, the spring in the parking brake module retracts the inner cable and the nipple moves away from the pawl operating lever.

After the emergency release cable has been used to release the parking brake, the next time an apply selection is made with the parking brake switch, the parking brake module automatically runs through a latching procedure to reconnect the spline shaft with the force sensor. The parking brake module turns the spline shaft so that it moves towards the force sensor. The pawl of the spline shaft then re-engages with the spigot of the force sensor. A second apply selection with the parking brake switch is required to apply the parking brake.

CLUTCH PEDAL POSITION SENSOR (MANUAL TRANSMISSION MODELS ONLY)

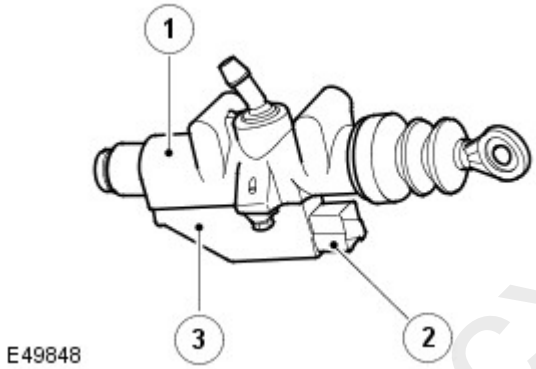

Item	Part Number	Description
1	-	Clutch master cylinder
2	-	Electrical connector
3	-	Clutch pedal position sensor

The clutch pedal position sensor supplies a signal of clutch pedal position to the parking brake module.

The clutch pedal position sensor is a Hall effect sensor which is attached to the side of the clutch master cylinder. The position of the piston in the clutch master cylinder effects a magnetic field in the sensor, and is translated by the sensor into an analogue voltage signal for the parking brake module. The parking brake module relates the signal to the position of the clutch pedal.

PARKING BRAKE INDICATORS

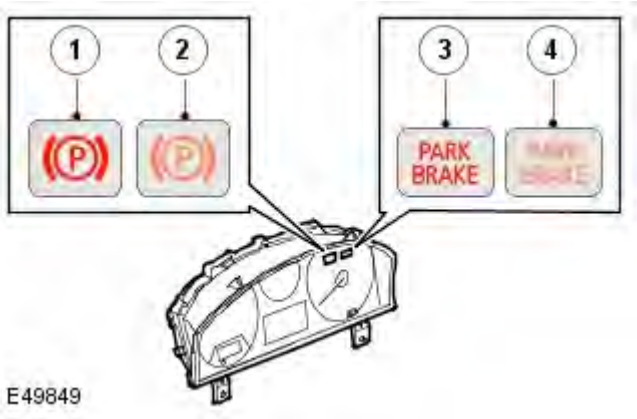

mcx30.com

Item	Part Number	Description
1	-	Red warning indicator (all except NAS)
2	-	Amber warning indicator (all except NAS)
3	-	Red warning indicator (NAS only)
4	-	Amber warning indicator (NAS only)

The parking brake has two warning indicators, one amber and one red, located in the speedometer of the instrument cluster.

Amber Parking Brake Warning Indicator

The amber parking brake warning indicator is continuously illuminated if there is a parking brake system fault. Operation of the indicator is controlled by a high speed controller area network (CAN) bus signal from the parking brake module to the instrument cluster.

Red Parking Brake Warning Indicator

When the parking brake is applied, the red parking brake warning indicator is continuously illuminated while the ignition is on and for 3 minutes after the ignition is switched off. If the system is unable to comply with an apply or release request, due to a system fault, the indicator flashes.

When the ignition is on and the indicator is not flashing, operation is controlled by a high speed CAN bus signal. When the ignition is off or when the indicator is flashing, operation is controlled by a hardwired signal from the parking brake module to the instrument cluster.

Text Messages

On vehicles with the high line instrument cluster, when there is a fault condition, illumination of the warning indicators is accompanied by a text message displayed in the message center.
For additional information, refer to: Information and Message Center (413-08 Information and Message Center, Description and Operation).

PARKING BRAKE MODULE

The parking brake module monitors external and internal inputs and adjusts the tension of the brake cables to operate the drum brakes and provide the required parking brake function.

The parking brake module is installed on a support bracket attached to the front of the spare wheel carrier. Two rubber mounts, installed on lugs on the underside of the parking brake module, locate in holes in the support bracket. The top corners of the parking brake module are secured to the support bracket with rubber mounts and flanged nuts.

The main components of the parking brake module are:

- A PCB (printed circuit board) incorporating the ASIC (application specific integrated circuit) for control of the parking brake.
- An electric motor.
- A gearbox.
- A spline shaft.
- A force sensor.

The spline shaft and the force sensor are connected together by a latch on the end of the spline shaft. The spline shaft rotates on the latch and moves axially in the gearbox. The latch and the force sensor slide in a channel in the body of the parking brake module.

To apply or release the drum brakes, the parking brake module runs the electric motor, which drives the gearbox. The gearbox turns the spline shaft to increase or decrease the tension in the brake cables. The parking brake module monitors the load exerted by the brake cables using the input from the force sensor.

Interior of Parking Brake Module

mcx30.com

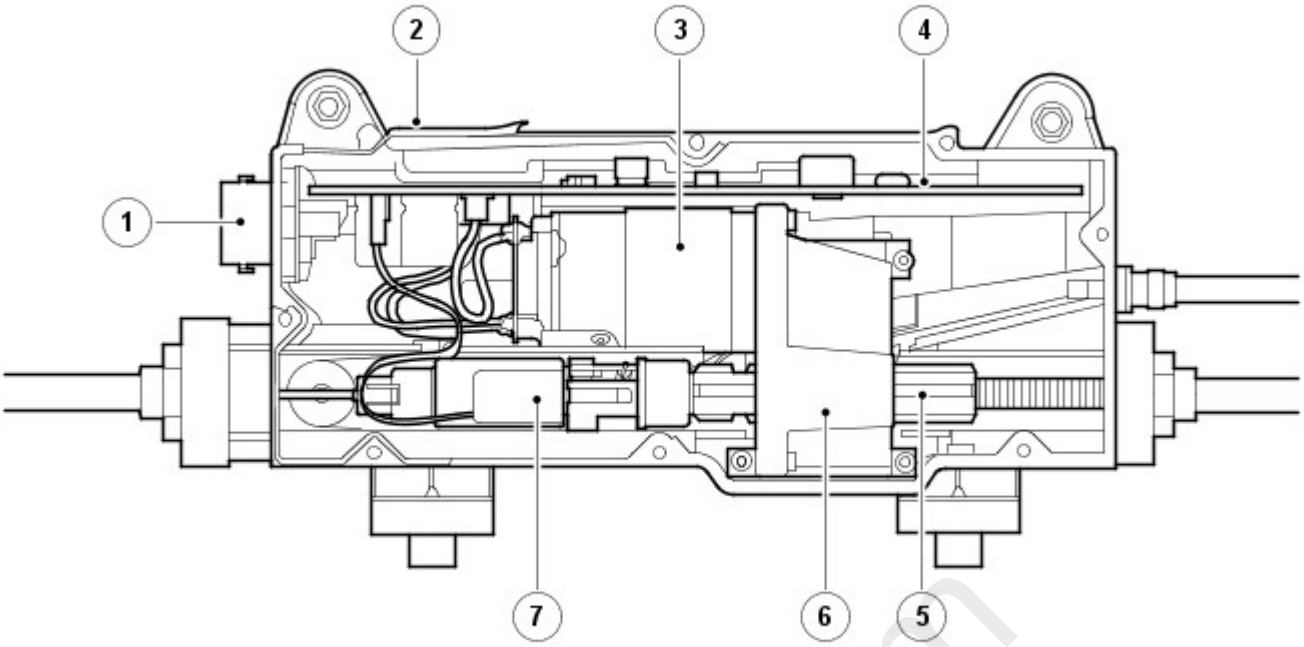

E49850

Item	Part Number	Description
1	-	Electrical connector
2	-	Housing
3	-	Electric motor
4	-	PCB
5	-	Spline shaft
6	-	Gearbox
7	-	Force sensor

Inputs and Outputs

A 32 pin electrical connector on the RH side of the parking brake module provides the interface between the PCB and the vehicle wiring.

The parking brake module is powered by two permanent battery power feeds from the battery junction box (BJB). Two connections with the central junction box (CJB) provide battery voltage signals in Power mode 0 and Power mode 6. Other hardwired inputs consist of those from the parking brake switch and, on manual transmission models, the clutch pedal position sensor.

In addition to the hardwired connections, the parking brake module is connected to the high speed CAN bus to enable communication with other vehicle systems.

Parking Brake Module Harness Connector C2178

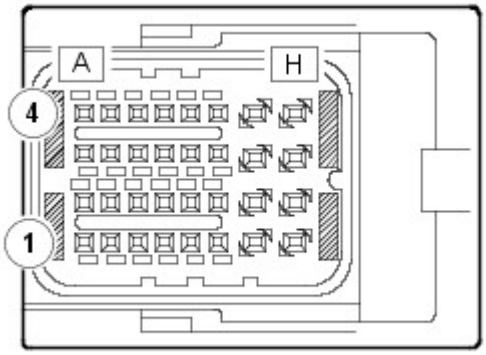

E49851

Parking Brake Module Harness Connector C2178 Pin Details

Pin No.	Description	Input / Output
A1	Not used	-
A2	High speed CAN bus low out	Input/Output
A3	High speed CAN bus high in	Input/Output

Pin No.	Description	Input/Output
A4	High speed CAN bus low in	Input/Output
B1	Not used	-
B2	High speed CAN bus high out	Input/Output
B3	Parking brake switch SW1	Input
B4	Parking brake switch SW4	Input
C1 and C2	Not used	-
C3	Parking brake switch SW2	Input
C4	Parking brake switch SW5	Output
D1 to E1	Not used	-
E2	Clutch pedal position sensor ground	Input
E3	Clutch pedal position sensor signal	Input
E4	Clutch pedal position sensor power supply	Output
F1	Not used	-
F2	Not used	-
F3	Ignition power supply	Input
F4	Red parking brake indicator	Output
G1	Not used	-
G2	Ground	Output
G3	Not used	-
G4	Battery power supply	Input
H1	Not used	-
H2	Ground	Output
H3	Not used	-
H4	Battery power supply	Input

PARKING BRAKE OPERATION

The parking brake can be applied at any time provided sufficient battery power is available. For the parking brake to be released, various pre-conditions are required. The parking brake has manual and automatic operating modes, to cater for different operating circumstances, as detailed in the following table:

Operating Modes

Mode	Pre-Conditions	Driver Action
Static apply	Vehicle speed less than 2.5 km/h (1.6 mph).	Pull up parking brake switch.
Static release	1. Vehicle speed less than 2.5 km/h (1.6 mph). 2. Engine running. **OR** Ignition is ON and brake pedal or clutch pedal pressed (manual transmission). **OR** Ignition is ON and brake pedal or accelerator pedal pressed (automatic transmission).	Press down parking brake switch.
Ignition OFF apply	1. Vehicle speed less than 10 km/h (6.25 mph). 2. Ignition is OFF. 3. Selector lever is not in position 'P'. (automatic transmission).	Switch the ignition OFF.
Igniton OFF apply inhibit	1. Vehicle speed less than 2.5 km/h (1.6 mph). 2. Ignition is OFF. 3. Selector lever is not in position 'P'. (automatic transmission).	Switch the ignition OFF while pressing down parking brake switch.
Dynamic apply	Vehicle speed more than 2.5 km/h (1.6 mph).	Pull up parking brake switch as required.
Dynamic release	Vehicle speed more than 2.5 km/h (1.6 mph).	Release (to neutral position) or press down parking brake switch.
DAR (drive away release) (automatic transmission only)	1. Ignition is ON. 2. Transmission in gear 1, 2 or R (with high range selected) or 1, 2, 3 or R (with low range selected). 3. Accelerator pedal pressed more than 2%. 4. Seatbelt is fastened. 5. Drivers door is closed.	None. Parking brake released automatically on drive away.

Operating Voltages

Actuation of the parking brake (apply or release) is only started if the power supply to the parking brake module is within 9 to 18 volts. At any voltage in this range, the parking brake module is able to tighten the brake cables to the maximum, to fully apply the parking brake, although at voltages between 9 and 10.5 volts the actuation time may exceed 1.0 second.

During a parking brake actuation:

- If the power supply to the parking brake module decreases to less than 8.3 volts, the parking brake module continues the actuation, but stores a related fault code. If the ignition is on, the parking brake module also signals the instrument cluster to illuminate the amber parking brake warning indicator and flash the red parking brake warning indicator. On vehicles with the high line instrument cluster, a message advising there is a parking brake fault is shown in the message center. The warning indications are discontinued if the power supply voltage increases to 8.3 volts or more.
- If the power supply voltage decreases to less than 7.5 volts, the parking brake module discontinues the actuation. Actuation is automatically resumed if the power supply voltage subsequently increases to 7.5 volts or more and the parking brake switch request is still valid.
- If the power supply voltage decreases below 6.5 volts, the parking brake function is disabled for the remainder of the ignition cycle.
- If the power supply voltage increases to more than 18.0 volts, the parking brake module immediately disables the

parking brake function and stores a related fault code. If the ignition is on, the parking brake module also signals the instrument cluster to illuminate the amber parking brake warning indicator and flash the red parking brake warning indicator. On vehicles with the high line instrument cluster, a message advising that the parking brake has a fault and is not functioning is shown in the message center. The parking brake function remains disabled until the power supply voltage is within 9 to 18 volts again. When the power supply voltage is within 9 to 18 volts again, the warning indications are cancelled and actuation is automatically resumed if the parking brake module is in a dynamic mode of operation with a valid parking brake switch request.

• NOTE: The instrument cluster shuts down below 8 volts, so warning indications and messages are not displayed below 8 volts. CAN transmission stops if battery voltage drops below 7.0 volts and re-starts when voltage goes above 7.5 volts.

Sleep Mode

To reduce quiescent drain on the vehicle battery, the parking brake module incorporates a sleep mode. The parking brake module enters the sleep mode, provided the ignition is off and there are no signals from the wheel speed sensors, when one of the following occurs:

- 20 minutes elapse after the last actuation of the parking brake.
- If no actuation occurred, 20 minutes elapse after the ignition is switched off.

The parking brake module wakes up from the sleep mode when on of the following occurs:

- An apply or release request is made with the parking brake switch.
- The ignition is switched on.
- A key out apply is activated.

The parking brake module wakes up within 500 ms. The high speed CAN bus is activated within 200 ms maximum.

When the parking brake module is woken with a release request from the parking brake switch, the parking brake module ignores the request but illuminates the red brake warning indicator. The parking brake module extinguishes the red brake warning indicator and goes back to sleep immediately the switch is released to the neutral position.

When the parking brake module is woken with an apply request from the parking brake switch, if the parking brake is already applied the parking brake module ignores the request but illuminates the red brake warning indicator. The parking brake module extinguishes the red brake warning indicator and goes back to sleep immediately the switch is released to the neutral position. If the parking brake is in the released condition when the apply request is made, the parking brake module illuminates the red brake warning indicator and applies the parking brake. The parking brake module extinguishes the red brake warning indicator and goes back to sleep 3 minutes after the apply activation, or immediately after the switch is released to the neutral position, whichever occurs last.

Dynamic Apply

In the dynamic apply mode, if the vehicle speed is more than 10 km/h (6.25 mph) when the parking brake switch is selected to apply, the parking brake module requests the ABS module to activate the disc brakes on all four wheels. When the vehicle comes to a standstill, the parking brake module statically applies the parking brake. Once the static load is achieved, the hydraulic pressure is removed. If the parking brake switch is released to the neutral position, or pressed down to the release position, during dynamic apply, braking is cancelled.

The anti-lock brake system (ABS) module monitors the deceleration rate using the wheel speed sensor signals, and adjusts the hydraulic pressure to the disc brakes as required to achieve the required rate. All of the anti-lock control - traction control system brake functions remain enabled in the dynamic apply mode.

The parking brake module incorporates two fallback functions for the dynamic apply mode.

- Fallback 1 is invoked if vehicle speed is between 2.5 km/h (1.25 mph) and V_{max} when the parking brake switch is selected to apply and the ABS module is unable to fulfil a hydraulic request. When fallback 1 is invoked, the parking brake module decelerates the vehicle, using only the parking brake. The parking brake module monitors the deceleration rate using the wheel speed information from the ABS module, and adjusts the tension of the brake cables to achieve the required rate. During deceleration the parking brake module also uses the wheel speed inputs from the ABS module to operate an anti-lock function for the rear wheels. When vehicle speed decreases to 2.5 km/h (1.25 mph) the parking brake module switches to the static apply mode.
- Fallback 2 is invoked if there is a loss of communication between the parking brake module and the ABS module or the CAN bus has failed. When fallback 2 is invoked, the parking brake module decelerates the vehicle using only the parking brake. The parking brake module tightens the brake cables under the control of the driver, no anti-lock function is available.

While dynamic apply is active, including fallback 1 and fallback 2, the parking brake module also outputs high speed CAN bus signals to:

- The ABS module, to apply the stoplamps.
- The instrument cluster, to sound an intermittent warning buzzer, at 0.5 second on, 1.0 second off.
- The instrument cluster, to illuminate the red parking brake warning indicator. The indicator is permanently illuminated except in fallback 2, when it flashes.

DAR Pre-arming

The DAR pre-arming function operates when the transfer box is in high range to reduce the parking brake release time during DAR and to provide a smooth take-off. DAR pre-arming is invoked when:

- The ignition is ON.
- The transmission is in gear 1, 2 or R.
- The vehicle is stationary.
- No failsafe tighten actuation has occurred.

Automatic Load Adjustment

While the ignition is on, the parking brake module constantly monitors the input from the force sensor. If the tension of the brake cables goes outside the limits for a given operating mode, the parking brake module automatically restores the tension within limits.

Failsafe Tighten. If, during pre-arming, the vehicle moves, then the maximum cable force is reinstated for the remainder of that ignition cycle.

Automatic Apply. While the parking brake is applied, if the tension of the brake cables decreases by a prescribed amount from the initial setting, the parking brake module automatically restores the tension to the initial setting.

Automatic Release. While the parking brake is released, if the tension of the brake cables increase to a prescribed amount, the parking brake module automatically reduces the tension to zero.

Parking Brake Switch Monitoring

The parking brake module monitors for the following types of fault in the parking brake switch system. If a fault is detected, the parking brake module stores a related fault code:

- Short circuits between a pull-down transistor in the parking brake module and battery voltage.
- Broken wires and microswitches.
- Plausibility.

The parking brake switch has a degree of in-built redundancy. If a single microswitch fault is detected the parking brake module can still determine the operating state of the parking brake switch. Short circuits or multiple failures cause the parking brake module to disable the parking brake switch for the remainder of the ignition cycle. The parking brake module also disables the parking brake switch if a plausibility fault occurs. However, since plausibility faults are usually caused by incomplete operation of the parking brake switch, the parking brake switch is re-enabled if the parking brake module subsequently establishes a plausible operating state.

If a single microswitch fault is detected, the parking brake module signals the instrument cluster to illuminate the amber parking brake warning indicator. On vehicles with the high line instrument cluster, the parking brake module also signals the instrument cluster to display a message advising there is a parking brake fault. During an apply actuation, the parking brake module also signals the instrument cluster to flash the red parking brake warning indicator.

For all other fault types, the parking brake module signals the instrument cluster to illuminate the amber parking brake warning indicator, and, on vehicles with the high line instrument cluster, to display a message advising the parking brake has a fault and is not functioning. If it makes an apply actuation, the parking brake module signals the instrument cluster to flash the red parking brake warning indicator for the remainder of the ignition cycle.

On the next ignition cycle, the warning indicators and the messages are only activated if the fault is still present, although the fault code is retained by the parking brake module until cleared by T4.

CONTROL DIAGRAM

• NOTE: A = Hardwired connection; D = High speed CAN bus; N = Medium speed CAN bus

mcx30.com

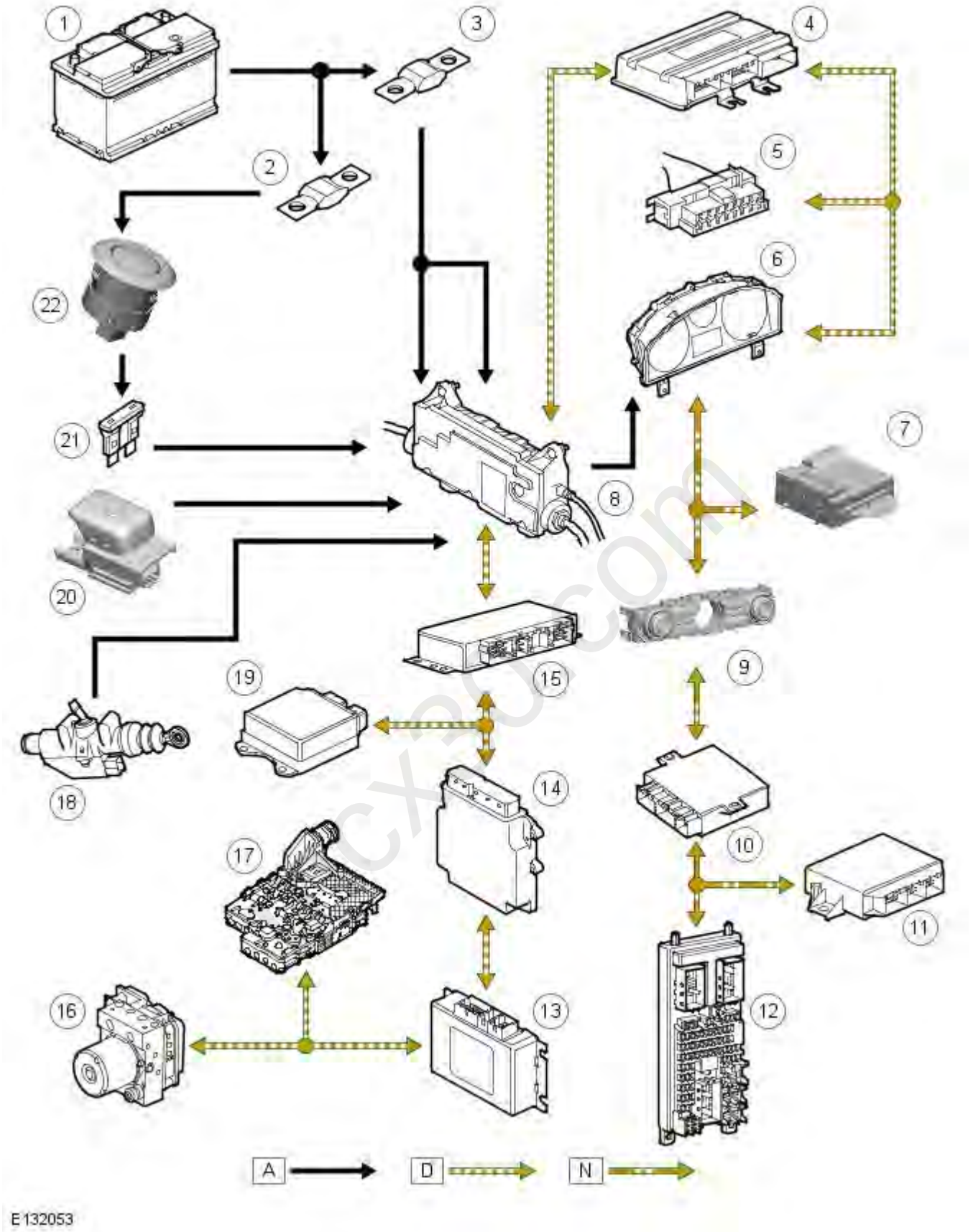

Item	Part Number	Description
1	-	Battery
2	-	Fusible link 17E, BJB
3	-	Fusible link 8E, BJB
4	-	Air suspension control module
5	-	Diagnostic socket
6	-	Instrument cluster
7	-	Integrated head unit
8	-	Parking brake module

9	-	automatic temperature control (ATC) module
10	-	Tire Pressure Monitoring Module (TPMM)
11	-	Parking Aid module
12	-	CJB module
13	-	Transfer box control module
14	-	engine control module (ECM)
15	-	Rear differential control module
16	-	ABS module
17	-	transmission control module (TCM)
18	-	Clutch pedal position sensor
19	-	restraints control module (RCM)
20	-	Parking brake switch
21	-	Fuse 9P, CJB (ignition)
22	-	Ignition push button

mcx30.com

Published: 11-May-2011

Parking Brake and Actuation - Parking Brake

Diagnosis and Testing

Principles of Operation

For a detailed description of the Parking Brake System and operation, refer to the relevant Description and Operation section of the workshop manual.
REFER to: Parking Brake (206-05 Parking Brake and Actuation, Description and Operation).

Inspection and Verification

• CAUTIONS:

Diagnosis by substitution from a donor vehicle is **NOT** acceptable. Substitution of control modules does not guarantee confirmation of a fault and may also cause additional faults in the vehicle being checked and/or the donor vehicle.

Please note this is a sealed unit and no attempt must be made to open the actuator as it will invalidate any warranty claim.

• NOTE: Check and rectify basic faults before beginning diagnostic routines involving pinpoint tests.

1. **1.** Verify the customer concern.
2. **2.** Visually inspect for obvious signs of mechanical or electrical damage.

Visual Inspection

Mechanical	Electrical
• Parking brake cable(s) condition and installation • Parking brake shoes condition and fitment • Parking brake drums (integrated into rear brake discs) • Parking brake actuator module condition and installation	• Parking brake indicators • Fuses • Wiring harness/electrical connectors - Check for bent/corroded pins • Controller Area Network (CAN) circuits • Parking brake switch • Parking brake actuator module

3. **3.** If an obvious cause for an observed or reported concern is found, correct the cause (if possible) before proceeding to the next step.
4. **4.** If the cause is not visually evident, verify the symptom and refer to the Symptom Chart, alternatively check for Diagnostic Trouble Codes (DTCs) and refer to the DTC Index.

Symptom Chart

Symptom	Possible Causes	Action
Parking brake will not engage or release	• Parking brake cables fouled, trapped or damaged • Parking brake cables incorrectly routed or fixed • Parking brake shoes, linings worn/contaminated • Parking brake drums (integrated into rear brake discs) • Parking brake shoes incorrectly adjusted following replacement • Parking brake actuator module malfunction	Check the parking brake cables for fouling, trapping or damage. Check the cables for correct routing. Check that the cable end fitting connector(s) are correctly fitted to the operating lever(s). Inspect the parking brake shoes and drums for condition/wear/contamination, REFER to: Rear Disc Brake (206-04 Rear Disc Brake, Description and Operation) / Parking Brake Shoes (206-05, Removal and Installation). Check the parking brake shoes for correct adjustment. REFER to: Parking Brake Shoe and Lining Adjustment (206-05 Parking Brake and Actuation, General Procedures). Check the operation of the parking brake actuator module, check for damage and/or excessive noise during operation. Check for parking brake actuator module DTCs.
Low parking brake efficiency/parking brake sticking/binding		

DTC Index

For a complete list of all Diagnostic Trouble Codes (DTCs) that could be logged on this vehicle, please refer to Section 100-00.
REFER to: Diagnostic Trouble Code (DTC) Index (100-00, Description and Operation).

Brake Bedding Mode

Bedding mode is a special mode available in the parking brake module (PBM) that disables the stability assist system (ABS) and allows the parking brake to provide the braking force rather than the conventional braking system whilst the vehicle is moving at a velocity of >3kph. This mode is entered via a series of brake pedal presses and switch applications, full details on this procedure is available in the relevant section of the workshop manual. If brake bedding mode is entered accidentally by the driver the RED warning lamp will flash in the Instrument Pack, the module will return to normal operational mode when the ignition has been cycled. This DTC (C1104-68) is intended to highlight the fact that although the RED lamp was illuminated there was no fault present in the control module.

Drive Cycles

Drive Cycle 1 Description

- Ignition On
- Make sure that no parking brake activation (diagnostic command or switch input) is attempted for a minimum of 3 seconds
- Retest for functionality

Drive Cycle 2 Description

- Ignition On
- Drive vehicle at a constant speed of 20KPH (13MPH) or slightly above in 2nd gear
- At a constant speed of 20KPH (13MPH) or slightly above apply the parking brake via the parking brake switch
- Press the brake pedal

Drive Cycle 3 Description

- Ignition On
- Make sure that the vehicle is stationary and that the parking brake is released
- Pull the parking brake switch to the apply position and hold in this position until the parking brake motor has stopped (this may take up to 5 seconds)
- Release the parking brake switch to the idle position, leave in the idle position for 2 seconds
- Push the parking brake switch to the release position (while pressing the brake pedal) and keep in this position until the parking brake motor has stopped (this may take up to 5 seconds)
- Release the parking brake switch to the idle position

mcx30.com

Published: 11-May-2011

Parking Brake and Actuation - Parking Brake Shoe and Lining Adjustment

General Procedures

• NOTE: This procedure must be carried out if, new parking brake shoes are fitted, new rear brake discs are fitted or if the vehicle has been mud wading (not water) for more than 50 miles.

1. Check the parking brake for correct operation.

2. CAUTIONS:

When the vehicle is in the mounting position a red flashing light may appear on the instrument cluster. This indicates that the parking brake actuator is in the mounting position. It does not indicate a vehicle fault.

The warning lamp on the instrument cluster will flash whilst the parking brake is being driven into the mounting position.

Using the Land Rover approved diagnostic system, drive the parking brake to the mounting position.

3. WARNING: Do not work on or under a vehicle supported only by a jack. Always support the vehicle on safety stands.

Raise and support the vehicle.

4. Remove the wheels and tires.

5. NOTE: Align the access hole with the indicators located on the back plate.

Locate the parking brake shoe adjuster.

- Remove the access plug.
- Rotate the brake disc.

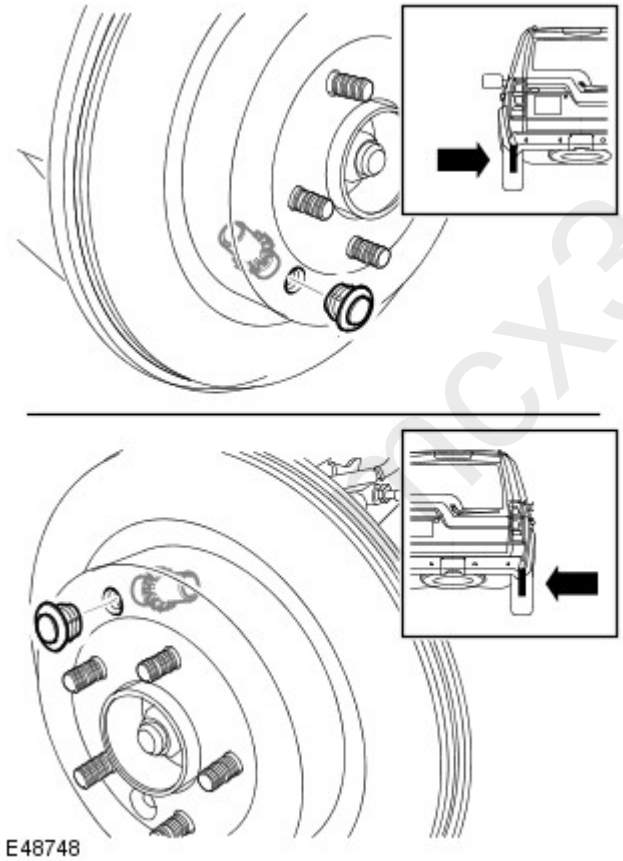

6. CAUTION: Failure to follow this step may cause damage to the parking brake system. Failure to displace the parking brake shoes, as shown, will result in incorrect clearance when carrying out the adjustment step.

• NOTE: The movement of the parking brake shoe will be small and may not be felt when levering.

• NOTE: LH shown.

Using a flat blade screwdriver, lever the brake shoes as indicated.

rcx30.com

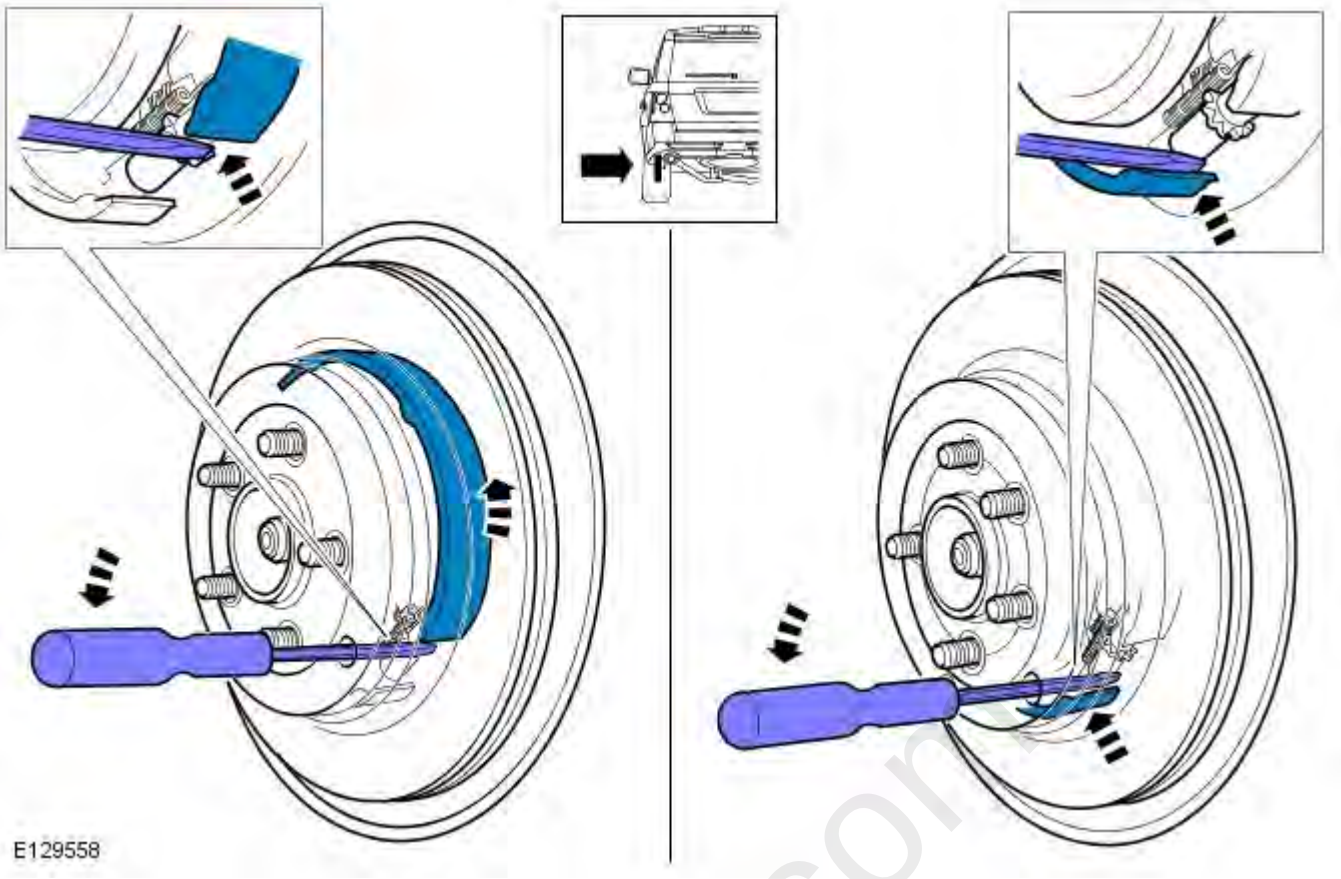

7. CAUTION: Failure to follow this step may cause damage to the parking brake system. Failure to displace the parking brake shoes, as shown, will result in incorrect clearance when carrying out the adjustment step.

- NOTE: The movement of the parking brake shoe will be small and may not be felt when levering.
- NOTE: RH Shown.

Using a flat blade screwdriver, lever the brake shoes as indicated.

mcx30.com

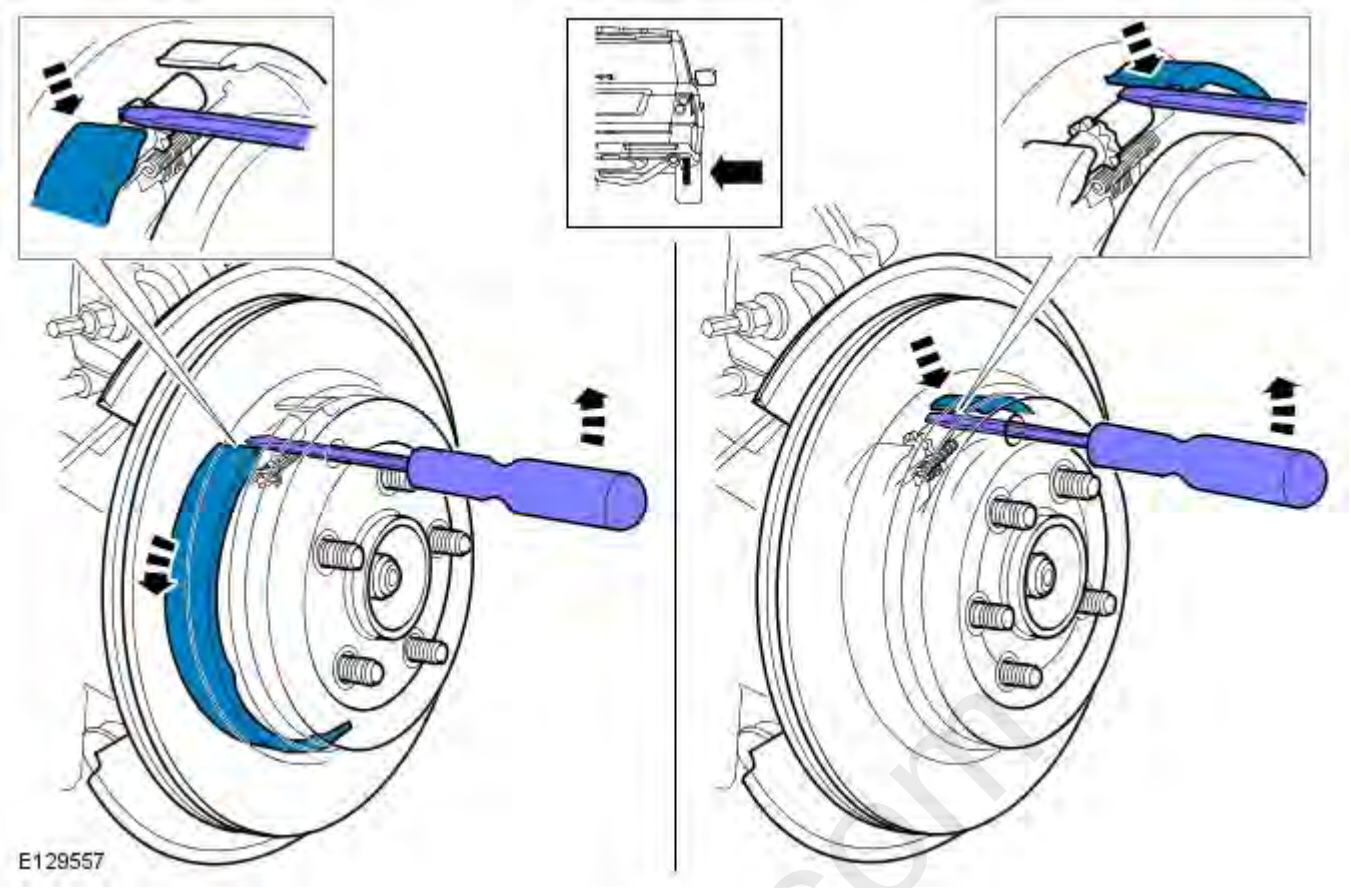

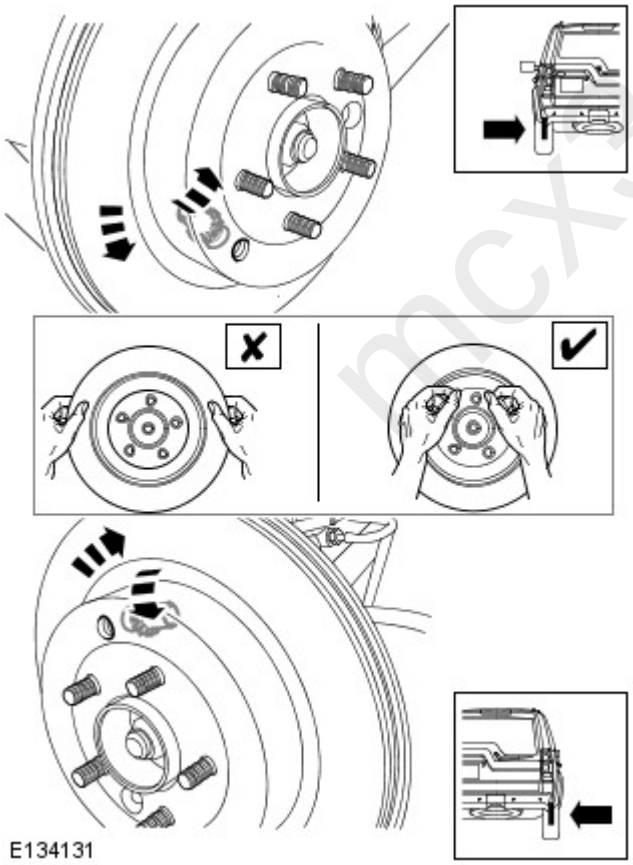

8. CAUTION: Do dot apply excessive force on the brake shoe adjuster. Failure to follow this instruction may result in damage to the parking brake system

Using a flat bladed screwdriver rotate the brake shoe adjuster to extend it until the brake disc is locked hand tight.

mcx30.com

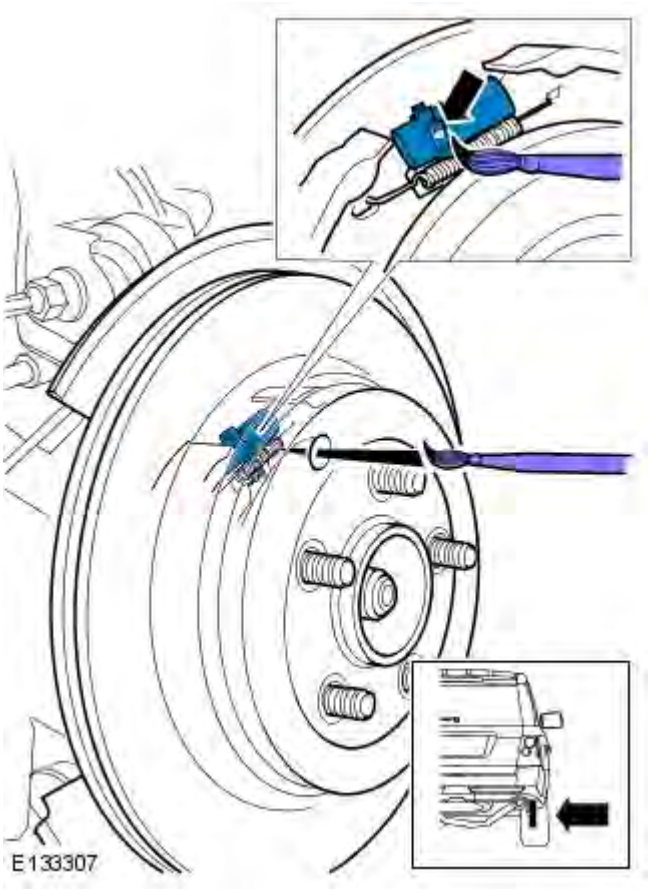

9. CAUTION: The following steps sets the running clearance for the parking brake shoes, failure to adhere to the paint marking process may cause damage to the park brake system when the adjustment steps are carried out.

Using suitable marker, mark the position of the brake shoe adjuster.

10. CAUTION: The parking brake adjuster must be rotated back EXACTLY one full revolution. Failure to follow this instruction may result in damage to the parking brake system.

Rotate the adjuster back one revolution until paint mark is visible.

11. CAUTION: The wedge adjuster must be correctly seated to make sure the parking brake cable is correctly adjusted. Failure to follow this instruction may result in damage to the parking brake system.

- Tap the brake disc lightly with a soft faced mallet, around the parking brake shoe location within the brake disc.
- Tighten the wedge adjuster Allen screw to 6 Nm (5 lb.ft).
- Install the access plug.

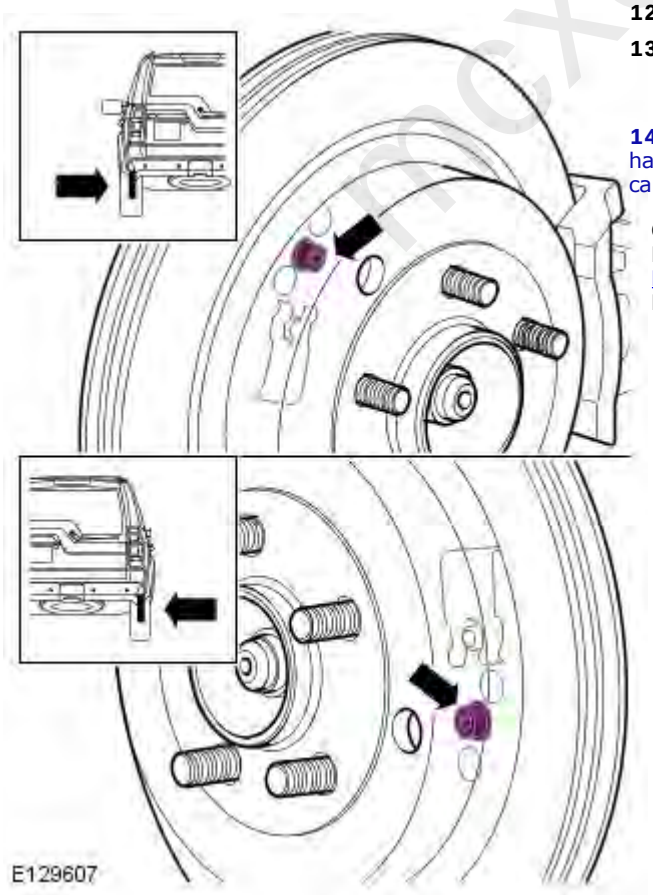

12. Repeat the above procedure for the other side.

13. Take the vehicle out of the mounting position by operating the parking brake twice.

14. CAUTION: If the parking brake shoes or the brake discs have been removed for access to other components then DO NOT carry out this procedure.

Carry out the parking brake shoe bedding-in procedure. For additional information, refer to: Parking Brake Shoes Bedding-In (206-05 Parking Brake and Actuation, General Procedures).

mcx30.com

Published: 11-May-2011

Parking Brake and Actuation - Parking Brake Shoes Bedding-In

General Procedures

• NOTE: This procedure must be carried out if, new parking brake shoes are fitted, new rear brake discs are fitted or if the vehicle has been mud wading (not water) for more than 50 miles.

1. Carry out the parking brake shoe bedding-in procedure.

2. NOTE: The electronic parking brake 'Service Bedding-in Procedure mode' will be active for the remainder of the igntion cycle, or until the vehicle speed exceeds 31 mph (50 kph). If the procedure needs to be re-entered, the entry actions must be repeated.

To enter 'Service Bedding-in Procedure' mode.

- Start and run the engine.
- Apply the footbrake 3 times within 10 seconds and hold applied after the 3rd application.
- Apply the electronic parking brake switch 4 times, followed by 3 release applications within 10 seconds.

3. Once the Service Bedding-in procedure mode has been entered, the electronic parking brake linings can be bedded-in by conducting 10 repeated stops from 30 - 35 kph (19 - 22 mph), followed by a 500 metre (547 yard) interval between each stop to allow the brakes to cool, using the electronic parking brake control switch.

- The electronic parking brake brake force will be increased up to the dynamic maximum so long as the switch is held in the applied position.
- If the switch is released to either the NEUTRAL or OFF positions, the electronic parking brake will be released.
- The electronic parking brake MUST be allowed to cool between applications, either by driving at 19 mph (30 kph) for 500 metres (547 yards) or remaining stationary for 1 minute between each application.

mcx30.com

Published: 11-May-2011

Parking Brake and Actuation - Parking Brake Cable LH

Removal and Installation

Removal

CAUTION: To avoid accidental operation of the parking brake, and possible damage to the parking brake actuator, remove Fusible link 8, located in the engine compartment fuse box before commencing work.

• NOTE: If the parking brake system has completed less than 50,000 cycles it is permissible to replace the parking brake cables. If over 50,000 cycles have been completed, then the cables can only replaced as part of the parking brake actuator and cable assembly. The parking brake cycle count can be checked using using the Land Rover approved diagnostic system, (ON/OFF = 1 cycle). If a cable breaks or becomes detached whilst the vehicle is being driven, a 'parking brake actuator unjaming procedure' may be required using the Land Rover approved diagnostic system.

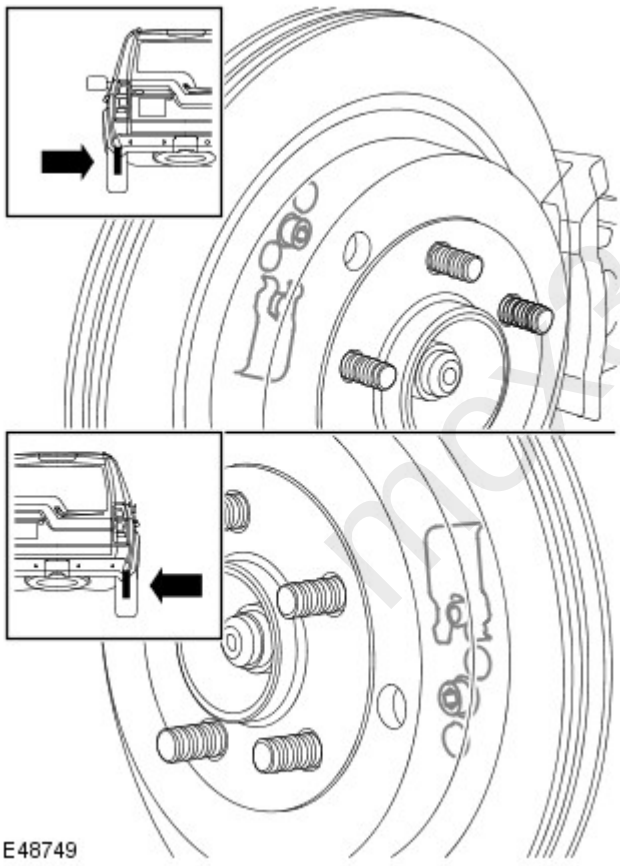

1. Using the Land Rover approved diagnostic system, drive the parking brake to the 'mounting position'.
2. Isolate the parking brake electrical circuit.
   - Remove fuse number 8 from the BJB.
3. WARNING: Do not work on or under a vehicle supported only by a jack. Always support the vehicle on safety stands.

   Raise and support the vehicle.
4. Remove both rear wheels and tires.
5. Release the parking brake shoe adjustment.
   - Loosen the screw.

mcx30.com

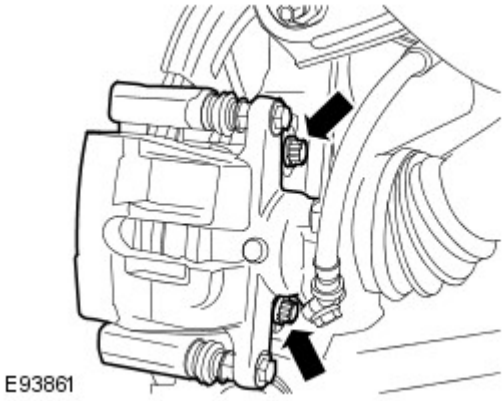

6. CAUTION: Do not allow the brake caliper to hang on the brake hose.

Reposition the LH rear brake caliper.

- Remove the 2 bolts.
- Using a suitable tie strap, support the brake caliper.

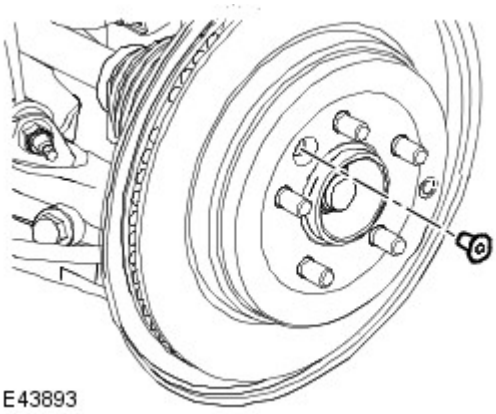

7. Remove the LH rear brake disc.

- Remove the screw.

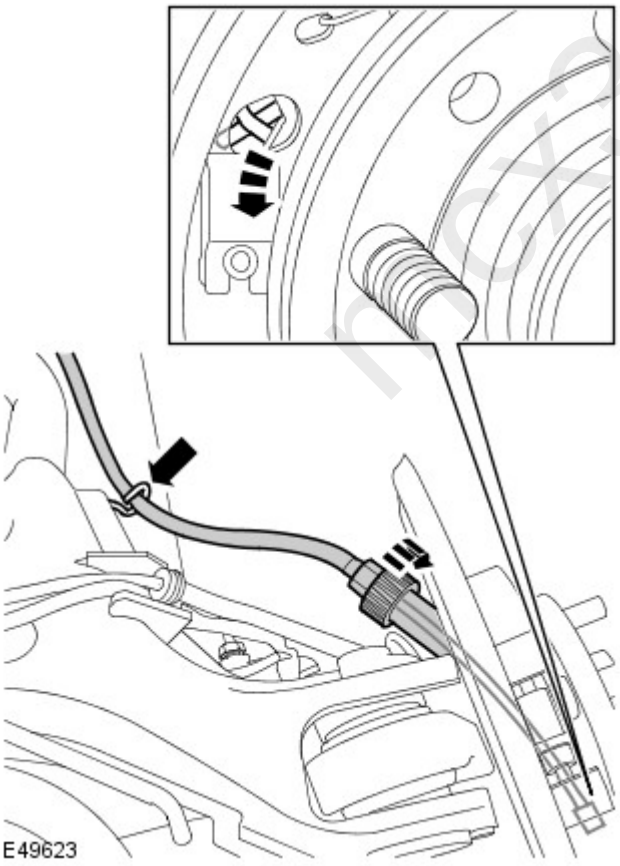

8. Disconnect parking brake cable from the wheel hub.

- Fully loosen the nut.
- Release the cable from the lower arm.
- Disconnect the inner cable from the brake shoe.

mex30.com

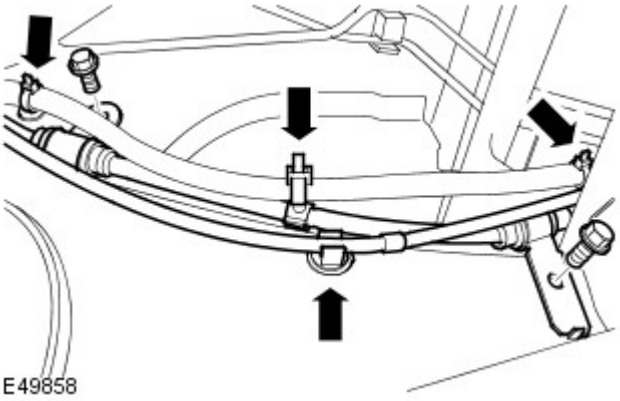

9. Release the LH parking brake cable.

- Remove the 2 bolts.
- Release the 3 wiring harness clips.
- Release the cable from the clip on the chassis.

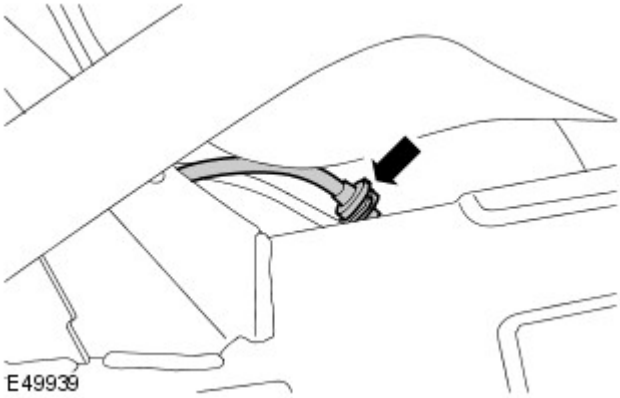

10. Release the LH parking brake cable.

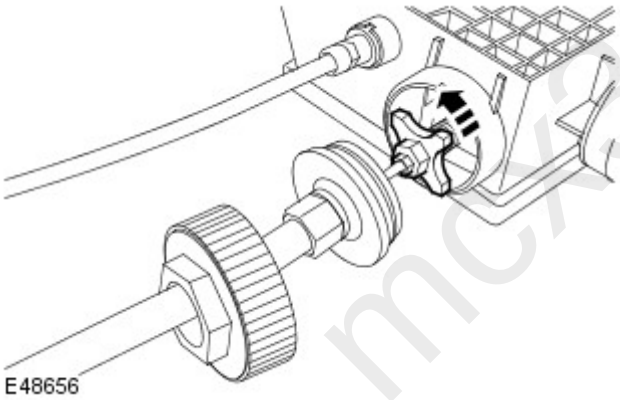

11. Remove the LH parking brake cable.

- Release the retaining nut.
- Release and remove the cable.

Installation

1. Install the LH parking brake cable.

- LH cable: Screw the cable in 5 complete turns.
- Tighten the retaining nut.

2. Locate and secure the LH parking brake cable.

- Tighten the bolts to 22 Nm (16 lb.ft).
- Secure the wiring harness.
- Secure the cable grommet to the integrated body frame bracket.

mcx30.com

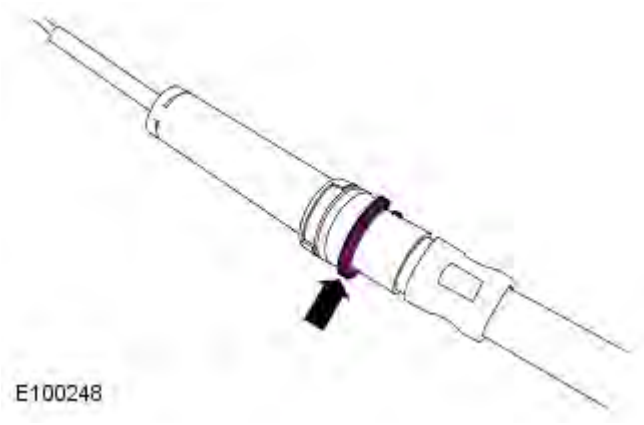

3. NOTE: Make sure that the brake cable circlip is positioned as shown.

Connect the parking brake cable to the wheel hub.

- Connect the cable to the brake shoe lever.
- Locate the cable to the backplate.
- Tighten the nut to 8 Nm (6 lb.ft).

4. CAUTION: Make sure that the component is clean, free of foreign material and lubricant.

Install the LH rear brake disc.

- Tighten the Torx screw to 35 Nm (26 lb.ft).

5. Secure the LH rear brake caliper.

- Remove and discard the tie strap.
- Tighten the bolts to 115 Nm (85 lb.ft).

6. NOTE: The adjustment procedure must be carried out in full.

Adjust the parking brake shoes.
For additional information, refer to: Parking Brake Shoe and Lining Adjustment (206-05 Parking Brake and Actuation, General Procedures).

7. Install the rear wheels and tires.

- Tighten the wheel nuts to 140 Nm (103 lb.ft).

8. Install fuse number 8 into the BJB.

mcx30.com

Published: 11-May-2011

Parking Brake and Actuation - Parking Brake Cable RH

Removal and Installation

Removal

CAUTION: To avoid accidental operation of the parking brake, and possible damage to the parking brake actuator, remove Fusible link 8, located in the engine compartment fuse box before commencing work.

• NOTE: If the parking brake system has completed less than 50,000 cycles it is permissible to replace the parking brake cables. If over 50,000 cycles have been completed, then the cables can only replaced as part of the parking brake actuator and cable assembly. The parking brake cycle count can be checked using using the Land Rover approved diagnostic system, (ON/OFF = 1 cycle). If a cable breaks or becomes detached whilst the vehicle is being driven, a 'parking brake actuator unjaming procedure' may be required using the Land Rover approved diagnostic system.

1. Using the Land Rover approved diagnostic system, drive the parking brake to the 'mounting position'.

2. Isolate the parking brake electrical circuit.

- Remove fuse number 8 from the BJB.

3. WARNING: Do not work on or under a vehicle supported only by a jack. Always support the vehicle on safety stands.

Raise and support the vehicle.

4. Remove the wheels and tires.

5. Release the parking brake shoe adjustment.

- Loosen the screw.

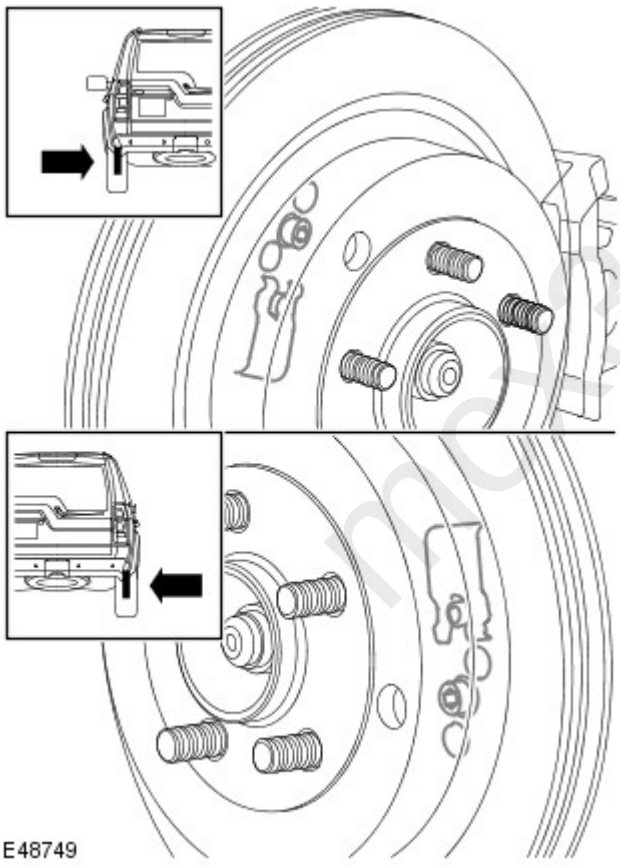

mo360.com

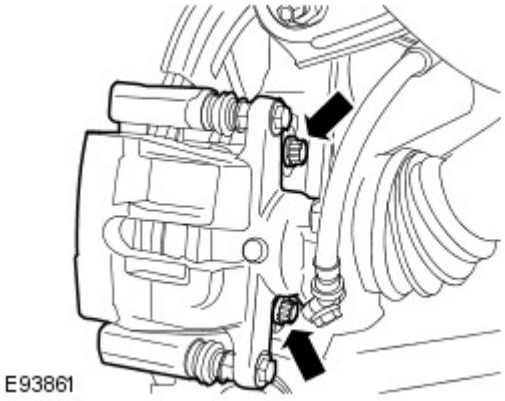

6. CAUTION: Do not allow the brake caliper to hang on the brake hose.

Reposition the RH rear brake caliper.

- Remove the 2 bolts.
- Using a suitable tie strap, support the brake caliper.

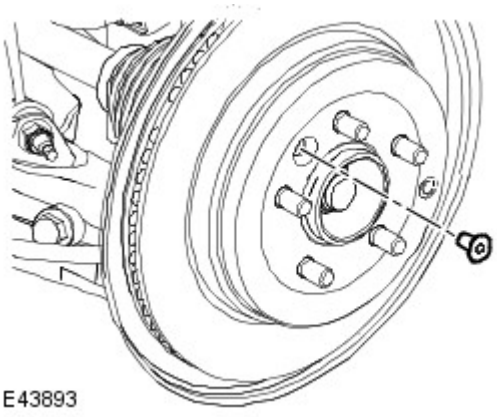

7. Remove the RH rear brake disc.

- Remove the screw.

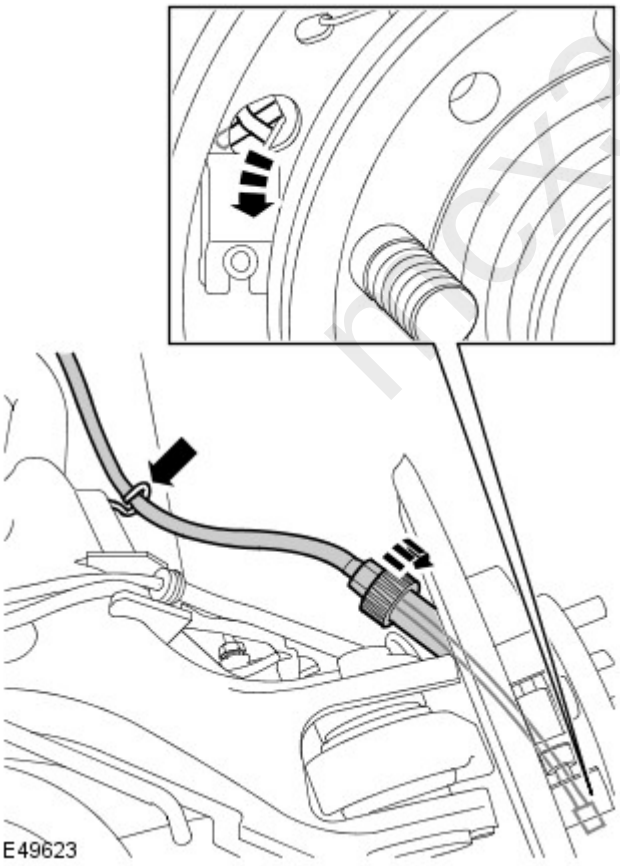

8. Disconnect parking brake cable from the wheel hub.

- Fully loosen the nut.
- Release the cable from the lower arm.
- Disconnect the inner cable from the brake shoe.

mex30.com

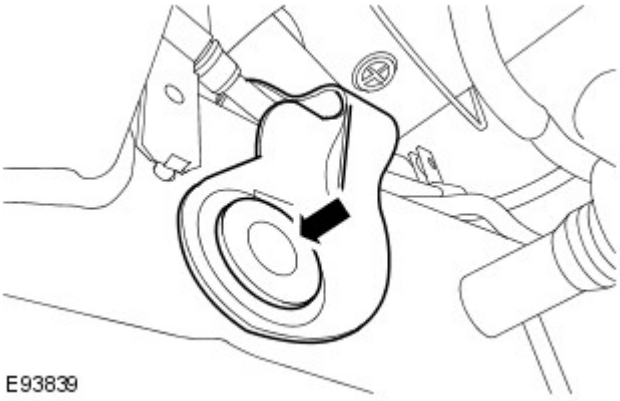

9. CAUTION: The fuel tank breather line bracket can be easily damaged when releasing it from the chassis.

Release the fuel tank breather line bracket.

- Remove the plastic insert.

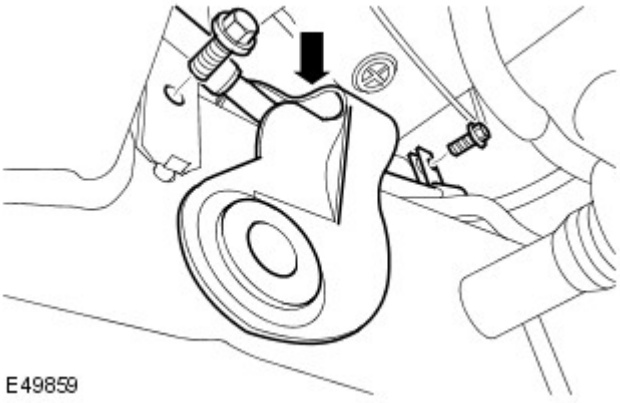

10. Release the RH parking brake cable.

- Remove the 2 bolts.
- Release the parking brake cable from the 2 pipe clips.
- Release the cable from the clip on the chassis.

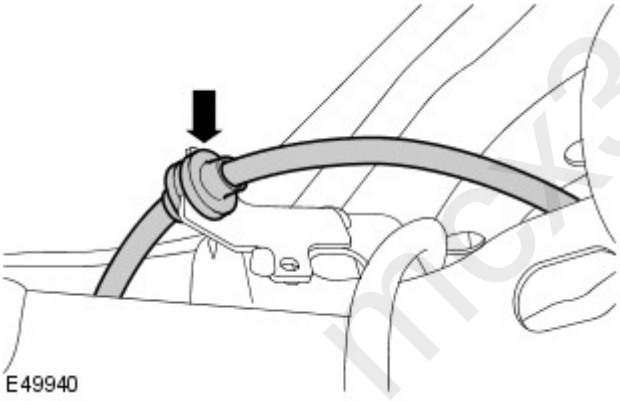

11. Release the RH parking brake cable.

mex30.com

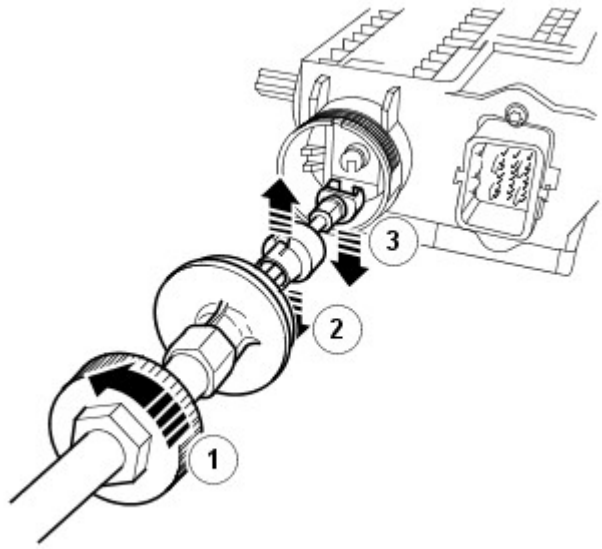

E61820

12. CAUTION: Make sure that no dirt or moisture enters the actuator during cable replacement.

Remove the RH parking brake cable.

- Release the retaining nut.
- Release the cable retaining clip.
- Release and remove the cable.

Installation

1. Install the RH parking brake cable.

- Install the cable.
- Install the cable retaining clip.
- Tighten the retaining nut.

2. Secure the fuel tank breather line bracket.

- Install the plastic insert.

3. Locate and secure the RH parking brake cable.

- Tighten the bolts to 22 Nm (16 lb.ft).
- Secure the parking brake cable to the 2 pipe clips.
- Secure the cable grommet to the integrated body frame bracket.

4. NOTE: Make sure that the brake cable circlip is positioned as shown.

Connect the parking brake cable to the wheel hub.

- Connect the cable to the brake shoe lever.
- Locate the cable to the backplate.
- Tighten the nut to 8 Nm (6 lb.ft).

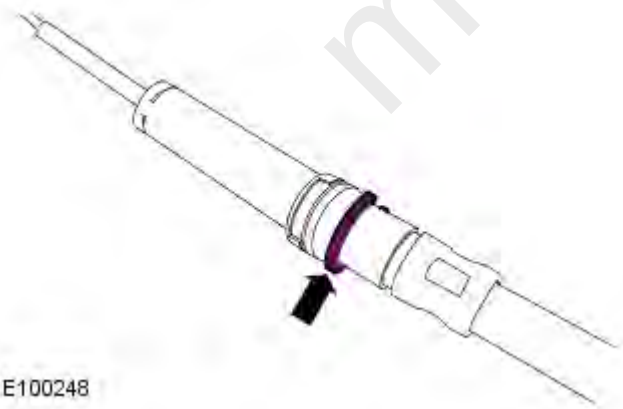
E100248

5. CAUTION: Make sure that the component is clean, free of foreign material and lubricant.

Install the RH rear brake disc.

- Tighten the Torx screw to 35 Nm (26 lb.ft).

6. Secure the RH rear brake caliper.

- Remove and discard the tie strap.
- Tighten the bolts to 115 Nm (85 lb.ft).

7. NOTE: The adjustment procedure must be carried out in full.

Adjust the parking brake shoes.

For additional information, refer to: Parking Brake Shoe and

mcx30.com

Lining Adjustment (206-05 Parking Brake and Actuation, General Procedures).

8. Install the rear wheels and tires.

- Tighten the wheel nuts to 140 Nm (103 lb.ft).

9. Install fuse number 8 into the BJB.

mcx30.com

Published: 11-May-2011

Parking Brake and Actuation - Parking Brake Switch

Removal and Installation

Removal

- NOTE: Removal steps in this procedure may contain installation details.

1. Refer to: Floor Console Upper Section (501-12 Instrument Panel and Console, Removal and Installation).

2.

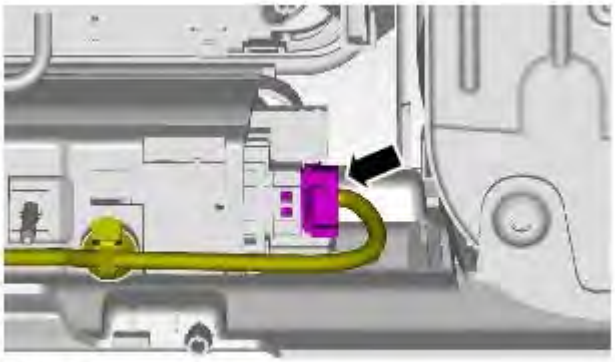

E129852

3.

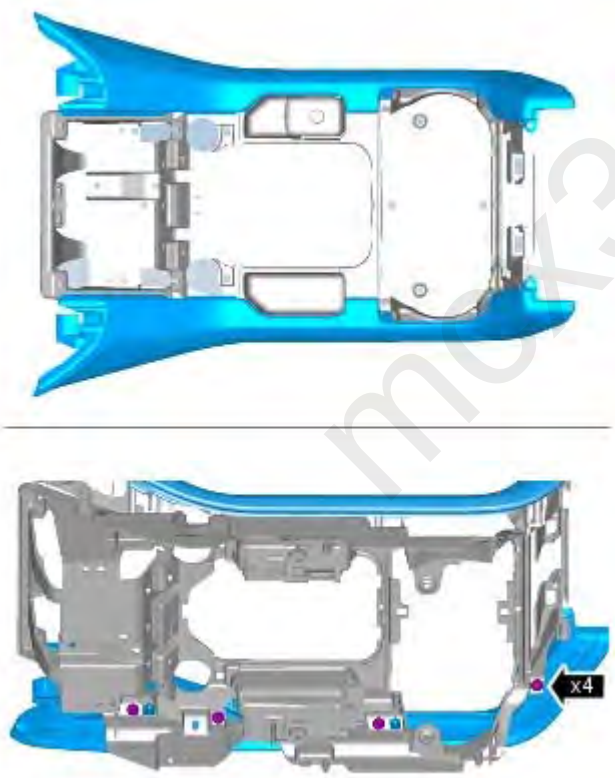

E129849

mk30.com

4.

E129851

5.

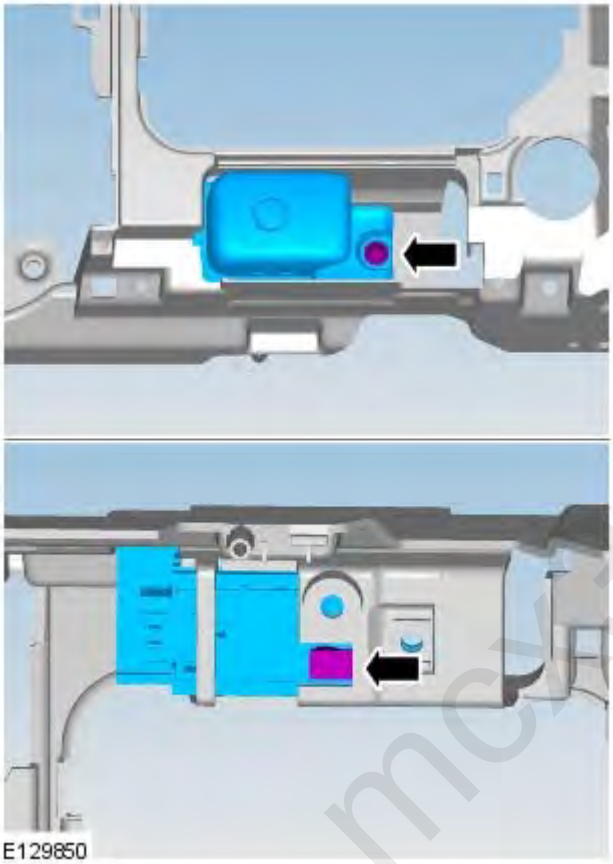

E129850

mcx30.com

Installation

1. To install, reverse the removal procedure.

Parking Brake and Actuation - Parking Brake Actuator

Removal and Installation

Removal

1. Using the Land Rover approved diagnostic system, drive the parking brake to the 'mounting position'.
2. Isolate the parking brake electrical circuit.
   - Remove fuse number 8 from the BJB.
3. WARNING: Do not work on or under a vehicle supported only by a jack. Always support the vehicle on safety stands.

   Raise and support the vehicle.
4. Remove the rear wheels and tires.
5. Release the parking brake shoe adjustment.
   - Remove the plug from the access hole in the brake disc.
   - Using a suitable tool, rotate the brake shoe adjuster to release the adjustment.

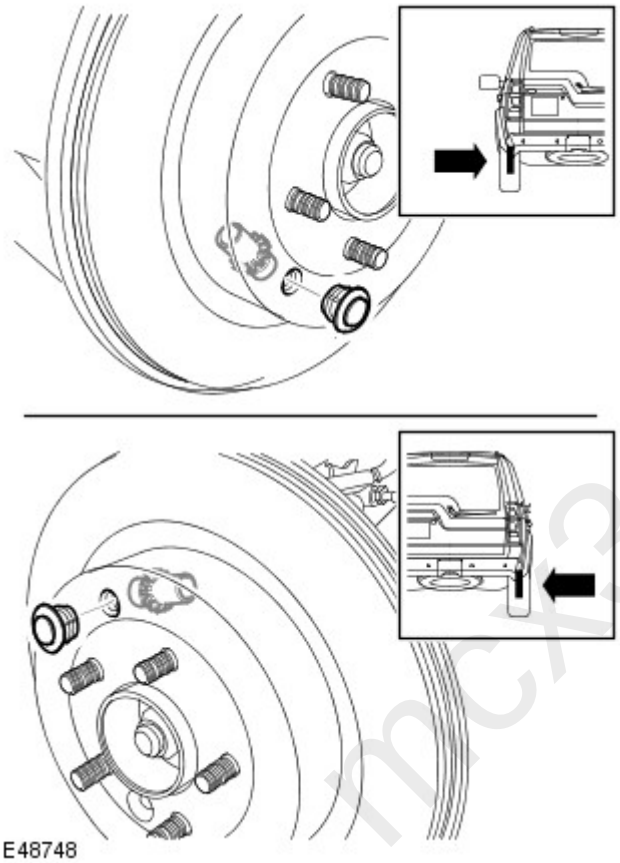

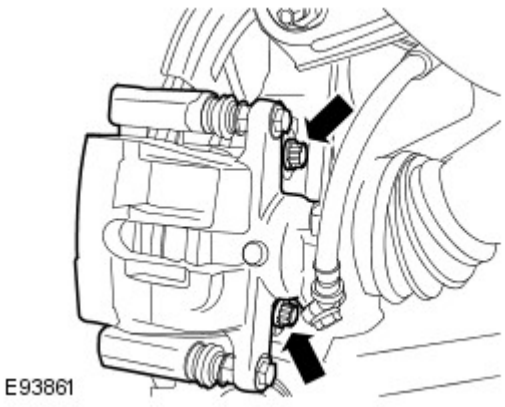

6. CAUTION: Do not allow the brake caliper to hang on the brake hose.

   Reposition the RH rear brake caliper.
   - Remove the 2 bolts.
   - Using a suitable tie strap, support the brake caliper.

mcx30.com

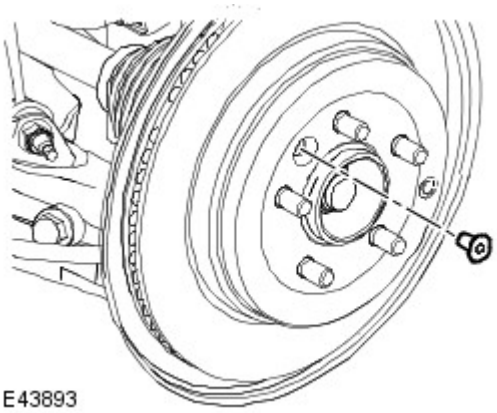

7. Remove the RH rear brake disc.

- Remove the screw.

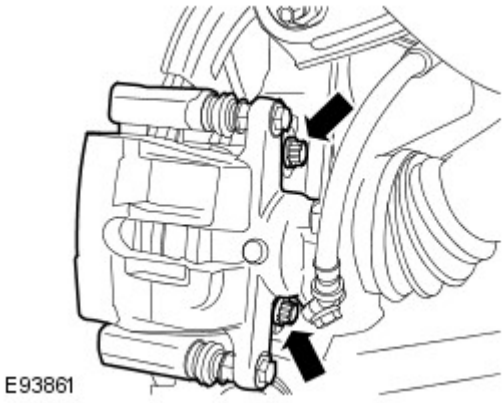

8. CAUTION: Do not allow the brake caliper to hang on the brake hose.

Reposition the LH rear brake caliper.

- Remove the 2 bolts.
- Using a suitable tie strap, support the brake caliper.

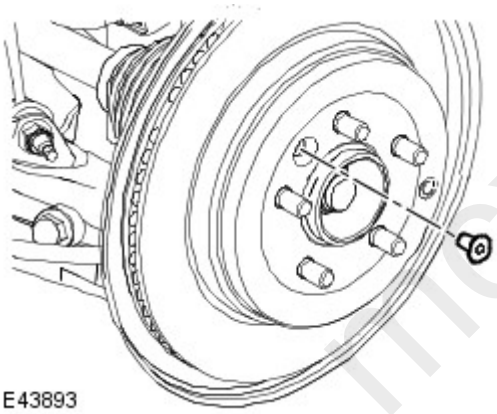

9. Remove the LH rear brake disc.

- Remove the screw.

mcx30.com

10. Disconnect both parking brake cables from the wheel hubs.

- Fully loosen the nut.
- Release the cable from the lower arm.
- Disconnect the inner cable from the brake shoe.

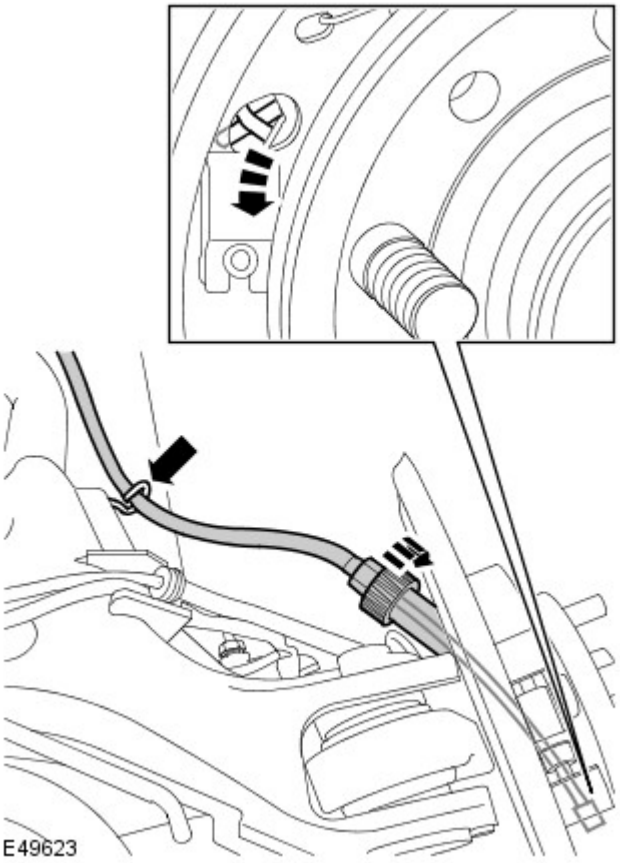

11. Release the LH parking brake cable.

- Remove the 2 bolts.
- Release the 3 wiring harness clips.
- Release the cable from the clip on the chassis.

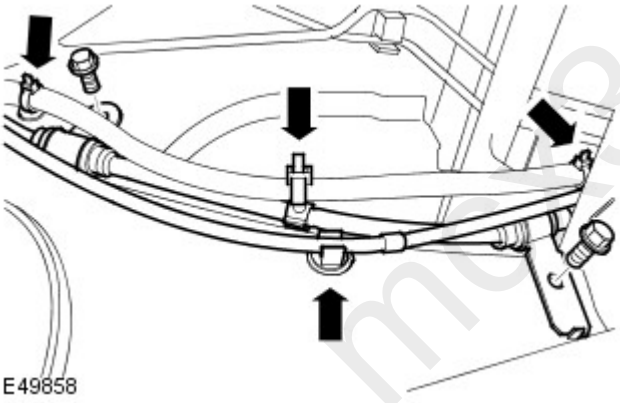

12. Release the LH parking brake cable.

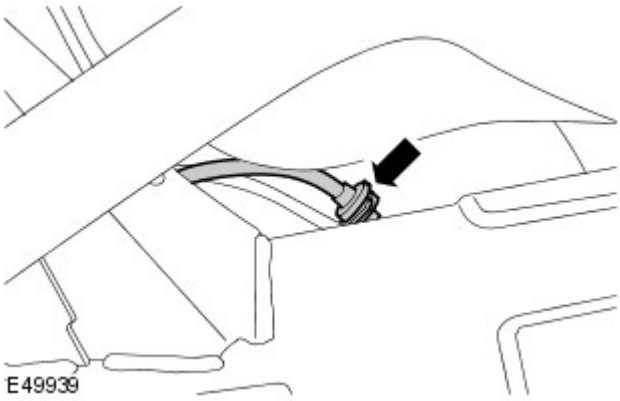

mq30.com

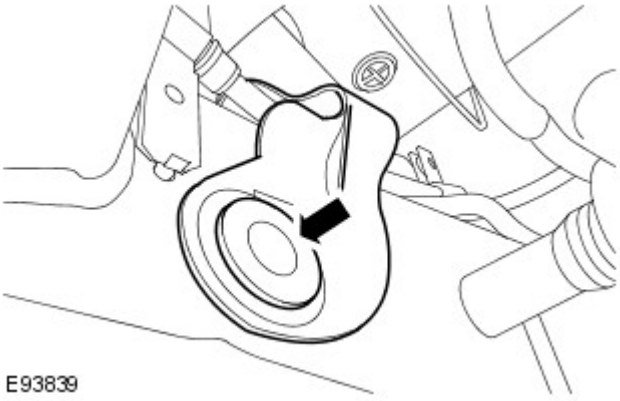

13. CAUTION: The fuel tank breather line bracket can be easily damaged when releasing it from the chassis.

Release the fuel tank breather line bracket.

- Remove the plastic insert.

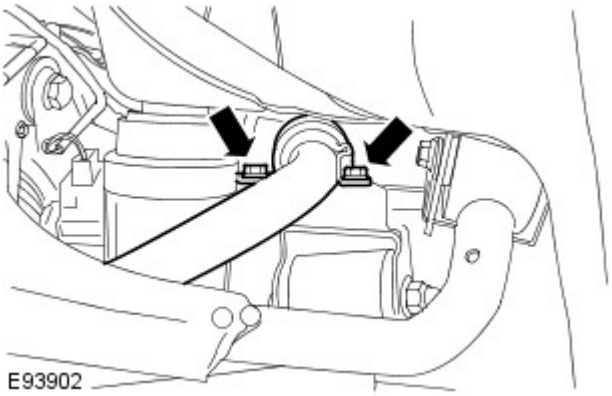

14. Raise the RH side of the rear stabilizer bar.

- Loosen the 2 bolts.

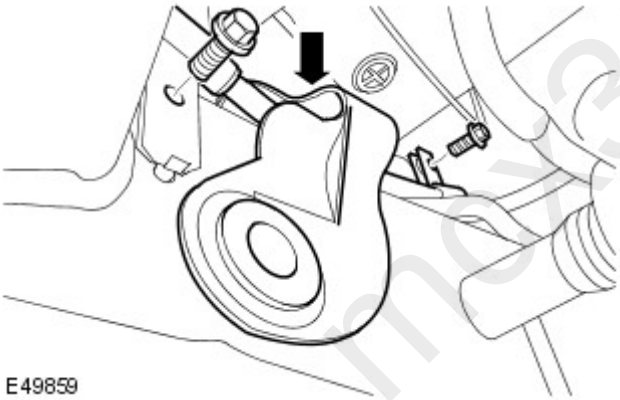

15. Release the RH parking brake cable.

- Remove the 2 bolts.
- Release the parking brake cable from the 2 pipe clips.
- Release the cable from the clip on the chassis.

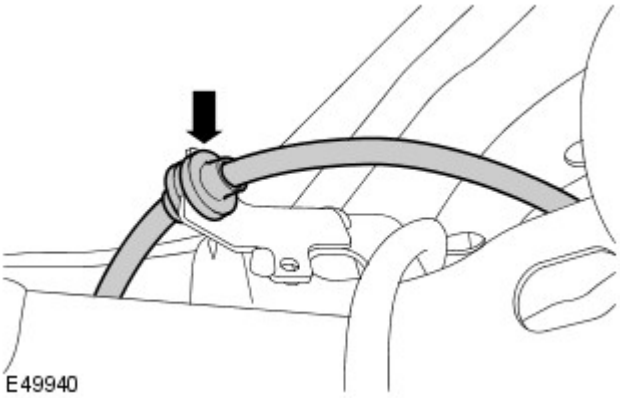

16. Release the RH parking brake cable.

mx30.com

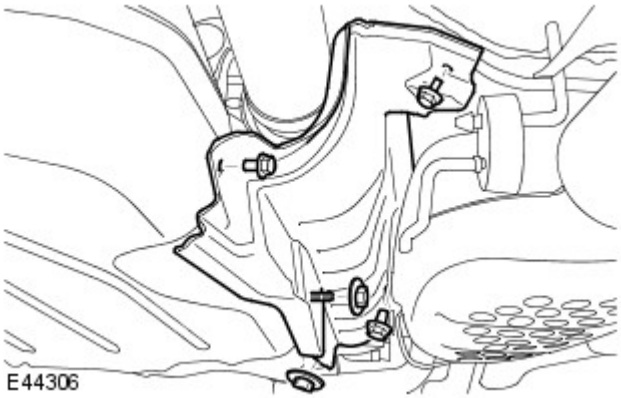

17. Remove the fuel tank heat shield.

- Remove the 3 bolts and 2 nuts.

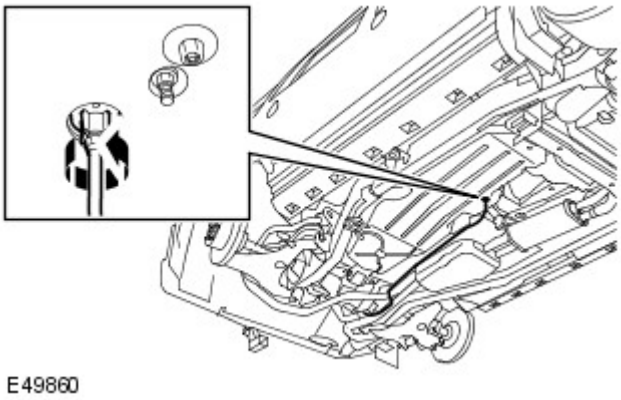

18. CAUTION: Inspect the parking brake emergency release cable to body seal and replace if damaged.

• NOTE: Note the fitted position of the parking brake emergency release cable to body seal.

Release the parking brake emergency release cable.

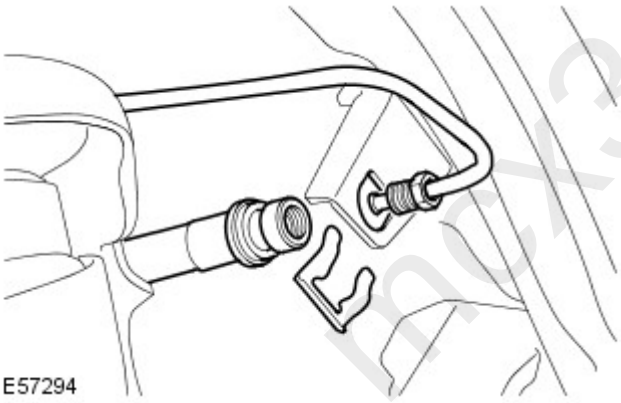

19. CAUTION: Before disconnecting or removing the components, make sure the area around the joint faces and connections are clean. Plug open connections to prevent contamination.

RH side rear: Disconnect the brake line.

- Position an absorbent cloth to collect fluid spillage.
- Disconnect the line union.
- Remove the clip.

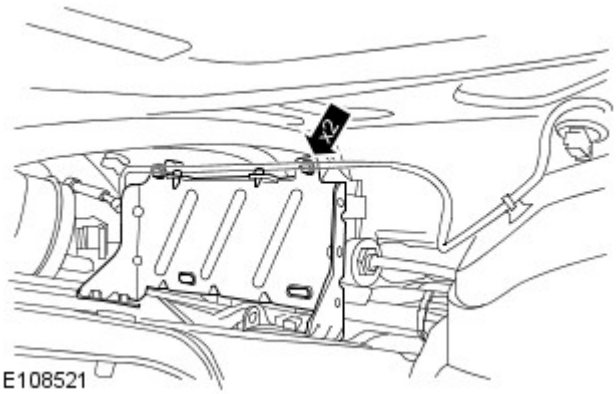

20. NOTE: Note the routing of the parking brake emergency release cable.

Displace the parking brake actuator and cable assembly.

- Disconnect the electrical connector.
- Remove the 2 nuts.

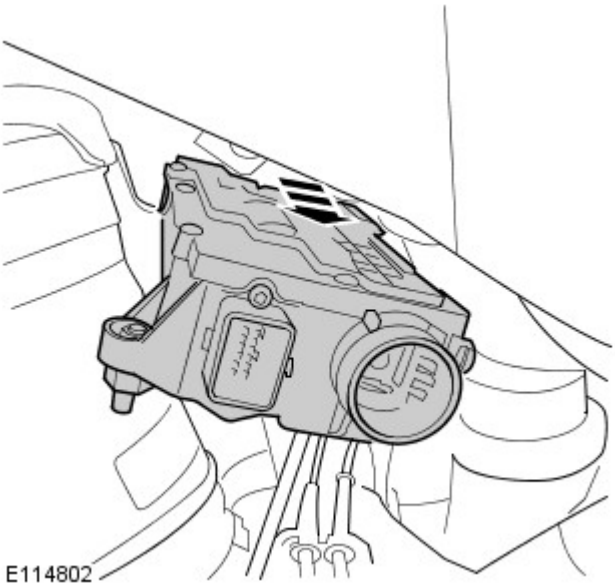

21. NOTE: Brake cable shown removed for clarity.

Remove the parking brake actuator and cable assembly.

- Withdraw from the RH rear wheel arch aperture.

Installation

1. NOTE: Note the routing of the parking brake emergency release cable.

Install the parking brake actuator and cable assembly.

- Install the 2 nuts.
- Connect the electrical connector.

2. NOTE: Remove and discard the blanking caps.

RH side rear: Connect the brake line.

- Clean the component mating faces.
- Secure the clip.
- Tighten the brake line union to 16 Nm (12 lb.ft).

3. CAUTION: Make sure the parking brake emergency release cable to body seal is installed correctly.

Locate and secure the parking brake emergency release cable.

4. Install the fuel tank heat shield.

- Tighten the bolts to 6 Nm (4 lb.ft).
- Tighten the nuts to 3 Nm (2 lb.ft).

5. Secure the fuel tank breather line bracket.

- Install the plastic insert.

6. Locate and secure the RH parking brake cable.

- Tighten the bolts to 22 Nm (16 lb.ft).
- Secure the parking brake cable to the 2 pipe clips.
- Secure the cable grommet to the integrated body frame bracket.

7. Locate and secure the LH parking brake cable.

- Tighten the bolts to 22 Nm (16 lb.ft).
- Secure the wiring harness.
- Secure the cable grommet to the integrated body frame bracket.

mcx30.com

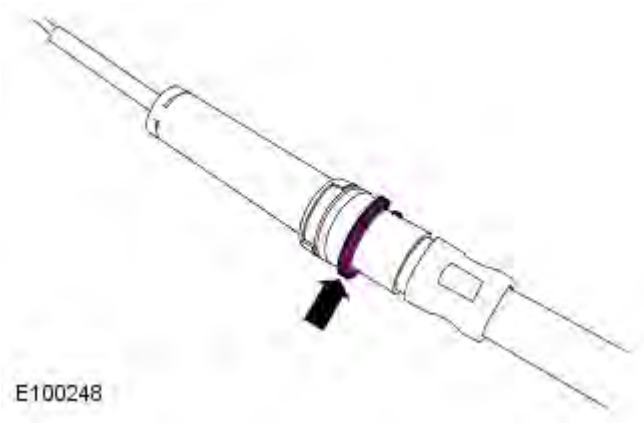

8. NOTE: Make sure that the brake cable circlip is positioned as shown.

Connect the parking brake cables to the wheel hubs.

- Connect the cable to the brake shoe lever.
- Locate the cable to the backplate.
- Tighten the nut to 8 Nm (6 lb.ft).

9. CAUTION: Make sure that the component is clean, free of foreign material and lubricant.

Install the LH rear brake disc.

- Tighten the Torx screw to 35 Nm (26 lb.ft).

10. Secure the LH rear brake caliper.

- Remove and discard the tie strap.
- Tighten the bolts to 115 Nm (85 lb.ft).

11. CAUTION: Make sure that the component is clean, free of foreign material and lubricant.

Install the RH rear brake disc.

- Tighten the Torx screw to 35 Nm (26 lb.ft).

12. Secure the RH rear brake caliper.

- Remove and discard the tie strap.
- Tighten the bolts to 115 Nm (85 lb.ft).

13. Adjust the parking brake shoes.
For additional information, refer to: Parking Brake Shoe and Lining Adjustment (206-05 Parking Brake and Actuation, General Procedures).

14. Bleed the brake system.
For additional information, refer to: Component Bleeding (206-00 Brake System - General Information, General Procedures).

15. Install the wheels and tires.

- Tighten the wheel nuts to 140 Nm (103 lb.ft).

16. Install fuse number 8 into the BJB.

17. Using the Land Rover approved diagnostic system, calibrate the parking brake actuator on an even surface.

18. Apply and release hand brake to confirm operation.

mcx30.com

Published: 11-May-2011

Parking Brake and Actuation - Parking Brake Shoes

Removal and Installation

Removal

• NOTE: If the parking brake shoes or the brake discs have been removed for access to other components then DO NOT carry out the bedding in procedure.

1. Using the Land Rover approved diagnostic system, drive the parking brake to the 'mounting position'.
2. Isolate the parking brake electrical circuit.
   - Remove fuse number 8 from the BJB.
3. WARNING: Do not work on or under a vehicle supported only by a jack. Always support the vehicle on safety stands.

   Raise and support the vehicle.
4. Remove the wheels and tires.
5. Release the brake caliper.
   - Remove the brake caliper anchor bolts.

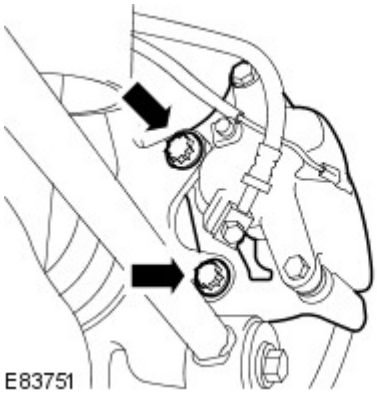

6. CAUTION: Do not allow the brake caliper to hang on the brake hose.

   Tie the brake caliper aside.

mcx30.com

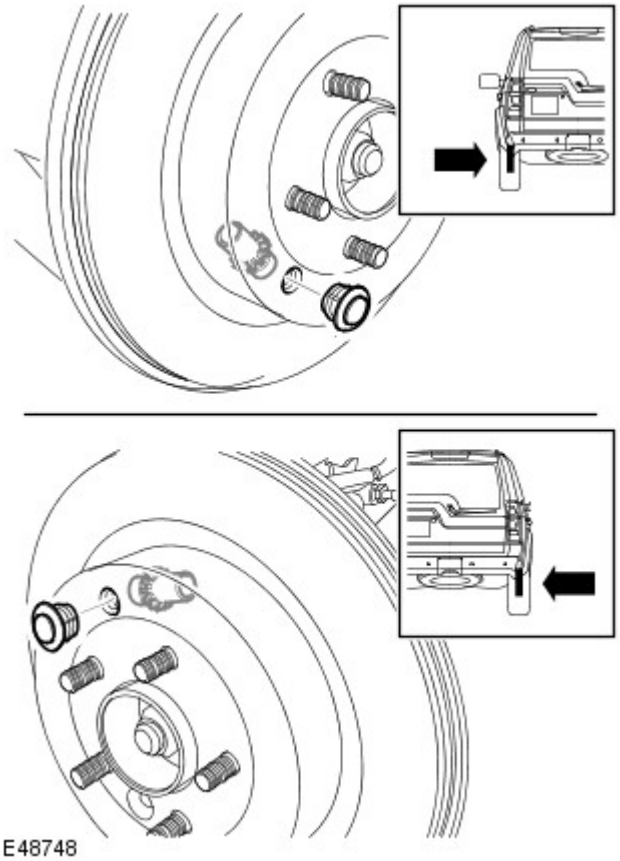

7. Release the park brake shoe adjustment.

- Remove the plug from the access hole in the brake disc.
- Using a suitable tool, rotate the brake shoe adjuster to release the adjustment.

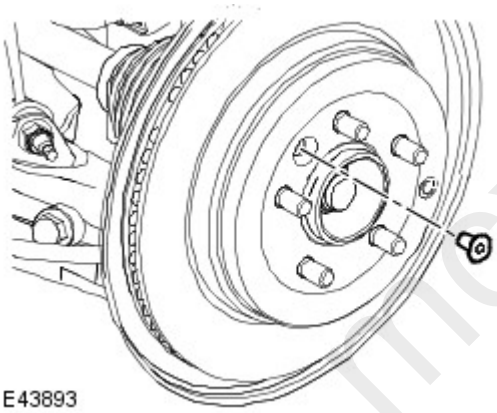

8. Remove the brake disc.

- Remove the Torx screw.

9. CAUTIONS:

Make sure that the green bias spring is installed to the right hand parking brake shoes and the red bias spring is installed to the left hand parking brake shoes.

Make sure the brake shoe spring is not over stretched.

- NOTE: **If equipped.**

  Remove the bias spring(s).

mex30.com

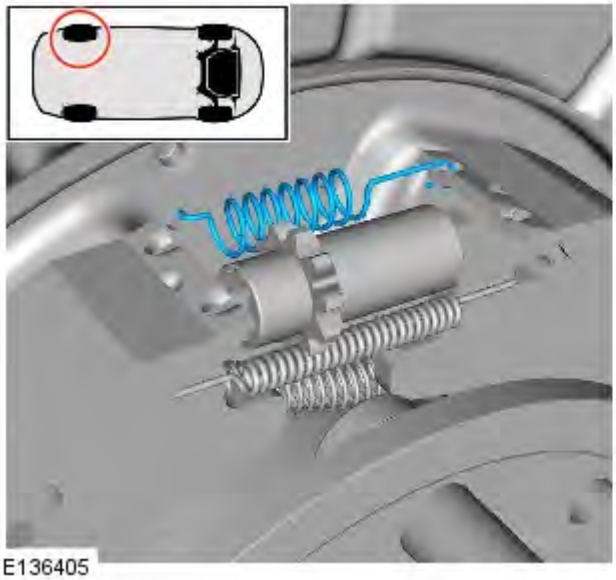

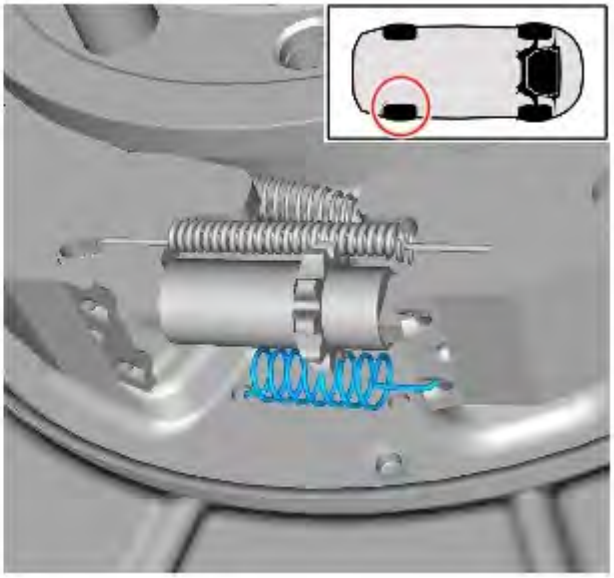

10. Remove the adjuster and return spring.

- Release the parking brake shoe adjuster to the minimum adjustment.

11. Remove the primary brake shoe.

- Remove the hold-down spring and retaining pin.
- Pivot the shoe to release it from the spreader plate and return spring.

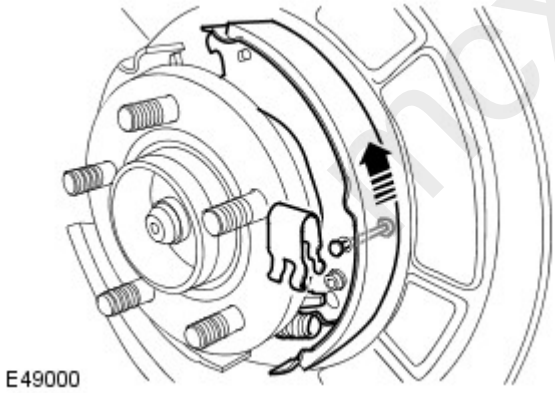

12. Remove the spreader plate and spring.

mcx30.com

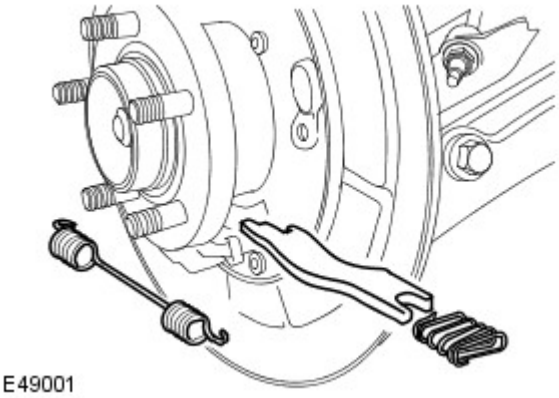

E49001

13. Remove the return spring.

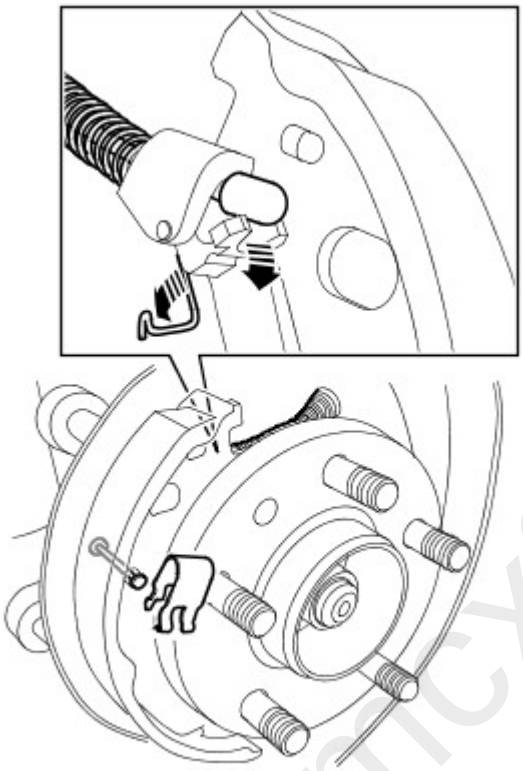

E49002

14. Remove the secondary brake shoe.

- Remove the hold-down spring and retaining pin.
- Disconnect the parking brake cable retaining spring from the brake shoe lever.
- Release the parking brake cable.

15. Repeat the above procedure for the other side.

Installation

1. WARNING: Do not use compressed air to clean brake components. Dust from friction materials can be harmful if inhaled.

Clean the backing plate and apply grease to the brake shoe contacts.

2. Clean the adjuster and set it to its minimum extension.

mcx30.com

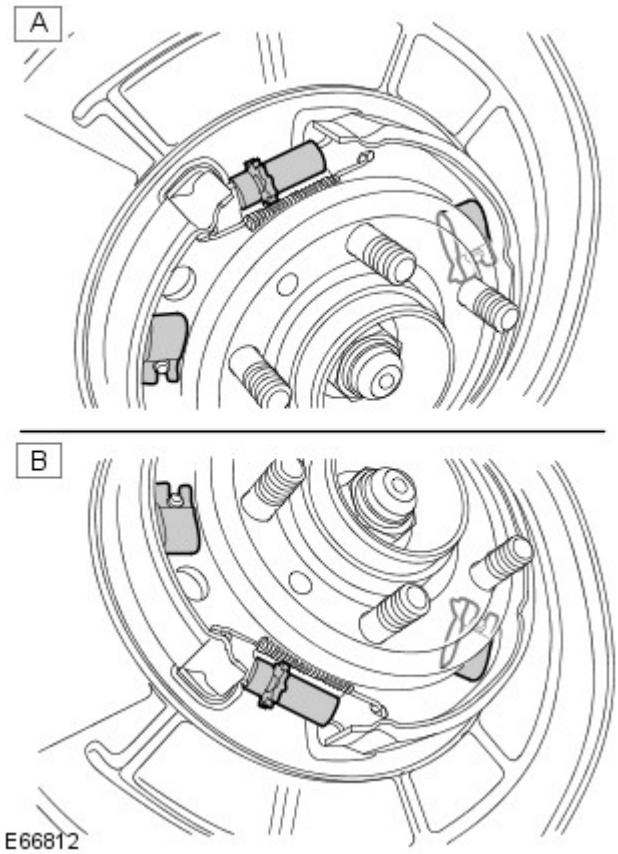

3. CAUTIONS:

Make sure the brake shoe spring is not over stretched.

Make sure the closed end of the retaining clip is installed facing the brake shoe adjuster. Failure to follow this instruction may result in damage to the vehicle.

Illustration 'A' is the LH side and 'B' is the RH side.

Install the secondary brake shoe.

- Connect the parking brake cable.
- Connect the parking brake cable retaining spring to the brake shoe lever, making sure the spring is not twisted.
- Install the hold-down spring and retaining pin.

4. Install the spreader plate and the spring.

- Using a tie strap, tie back the spreader plate spring.

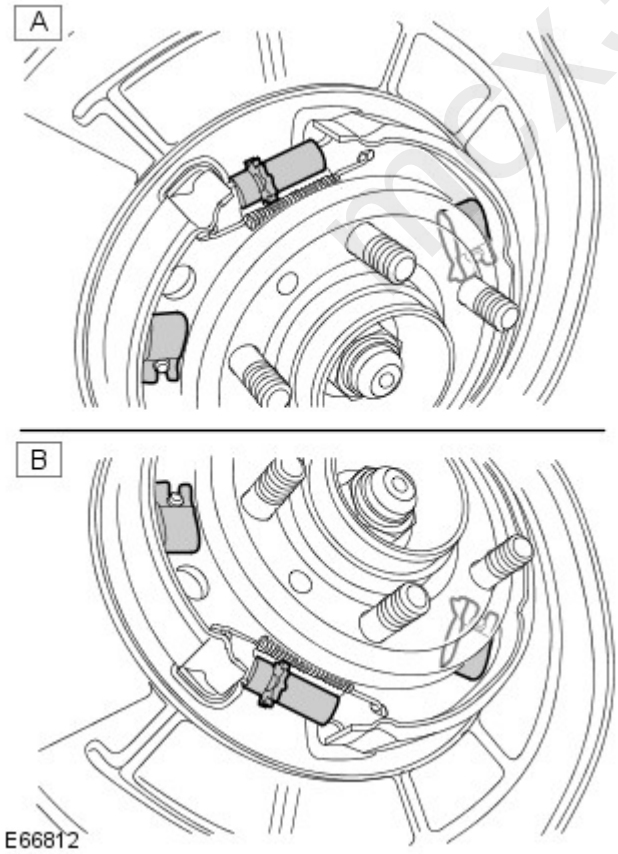

5. WARNING: Make sure the return spring and the adjuster spring are correctly installed to the primary shoe.

• CAUTIONS:

Make sure the brake shoe spring is not over stretched.

Make sure the closed end of the retaining clip is installed facing the brake shoe adjuster. Failure to follow this instruction may result in damage to the vehicle.

Illustration 'A' is the LH side and 'B' is the RH side.

Install the primary brake shoe.

- Install the return spring.
- Connect the primary brake shoe to the return spring.
- Locate the primary brake shoe to the spreader plate.
- Install the hold-down spring and retaining pin.

6. CAUTION: Make sure the brake shoe spring is not over

mex30.com

stretched.

Install the brake shoe adjuster and the retaining spring.

7. Remove and discard the spreader plate spring tie strap.

8. CAUTIONS:

Make sure that the green bias spring is installed to the right hand parking brake shoes and the red bias spring is installed to the left hand parking brake shoes.

Make sure the brake shoe spring is not over stretched.

- NOTE: **If equipped.**

Install the bias spring(s).

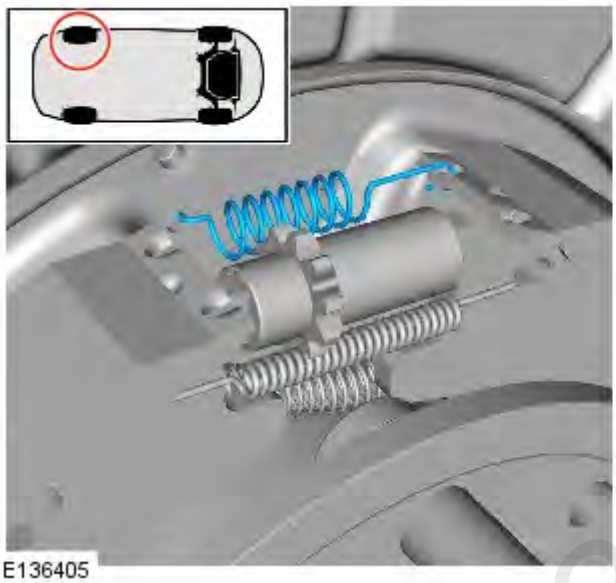

E136405

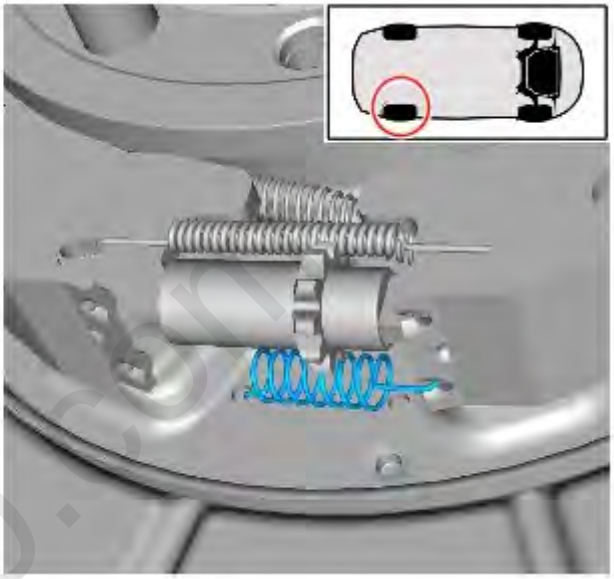

9. Make sure the brake disc and hub mating surfaces are clean.

10. Install the brake disc.

- Tighten the Torx screw to 35 Nm (26 lb.ft).

11. Install the brake caliper.

- Tighten the bolts to 115 Nm (85 lb.ft).

12. Repeat the above procedure for the other side.

13. Adjust the parking brake.
For additional information, refer to: Parking Brake Shoe and Lining Adjustment (206-05 Parking Brake and Actuation, General Procedures).

14. Install the wheels and tires.

- Tighten the wheel nuts to 140 Nm (103 lb.ft).

15. Install fuse number 8 into the BJB.

mcx30.com